MINISTRY OF EDUCATION AND SCIENCE OF UKRAINE
N.Ye. ZHUKOVSKY NATIONAL AEROSPACE UNIVERSITY
"KhAI"

МИНИСТЕРСТВО ОБРАЗОВАНИЯ И НАУКИ УКРАИНЫ
НАЦИОНАЛЬНЫЙ АЭРОКОСМИЧЕСКИЙ УНИВЕРСИТЕТ
им. Н.Е. ЖУКОВСКОГО
"Харьковский авиационный институт"

M.N. Fedotov

М.Н. Федотов

General arrangement of airplanes

THE SUMMARY OF LECTURES

Общее устройство самолетов

КОНСПЕКТ ЛЕКЦИЙ

Kharkov 2005

УДК 629.735.33.02(075.8)

General arrangement of airplanes/ M.N. Fedotov. – The summary of lectures. – Kharkov: N.Ye. Zhukovsky National aerospace university "KhAI", 2005. – 245 p.

This book includes classification of airplanes according to various criteria and general requirements to them. General information about the structure of main plane units (wing, fuselage, tail unit, landing gear, control systems) are given.

It is intended for students are studying "Aviation and astronautics".

Fig. 229. Tabl. 3. List 15.

The reviewers: ScD., Prof. Sergey A. Bychkov,
PhD., Ass. Prof. Eugeny T. Vasilevsky

Общее устройство самолетов / М.Н. Федотов. – Конспект лекций. – Харьков: Нац. аэрокосм. ун-т "Харьк. авиац. ин-т", 2005. – 245 с.

ISBN 966-662-120-7

Представлены классификация самолетов по различным критериям и общие требования к ним. Приведены общие сведения о конструкции основных агрегатов самолетов: крыла, фюзеляжа, оперения, шасси, системы управления.

Для студентов, обучающихся по направлению "Авиация и космонавтика".

Ил. 229. Табл. 3. Библиогр.: 15 назв.

Рецензенты: д-р техн. наук, проф. С.А. Бычков,
канд. техн. наук, доц. Е.Т. Василевский

ISBN 966-662-120-7

Chapter 1. CLASSIFICATION OF AIRPLANES

According to the **purpose civil airplanes** are divided as follows:

- **passenger** – of local-service airlines (up to ***20*** passengers); long-haul airlines: short-range (the distance is less than ***2,000*** km), medium (the distance is less than ***4,000*** km), long-distance (the distance is less than ***9,000*** km); and intercontinental (the distance is more than ***11,000*** km);
- **cargo** – light (mass of freight up to ***10*** t), medium (mass of freight up to ***40*** t), heavy (the mass of freight is more ***40*** t);
- **special-purpose** – ambulance plane, agricultural, reconnaissance (ice patrol, fish searching), fire-prevention, aerial photography;
- **trainers.**

Classification according to aerodynamic configuration.

Aerodynamic configuration of airplane (aircraft) is characterized by quantity and mutual positional relationship of its bearing surfaces.

Aerodynamic configurations of airplanes have following names in respect to a wing and the horizontal tails:

- normal (classic) configuration,
- canard configuration,
- "tailless" aircraft,
- "flying wing",
- configuration with a forward and rear horizontal tail,
- convertible configuration.

Distinction of the **normal (classic)** configuration is the arrangement of horizontal stabilizer behind a wing (Fig. 1.1).

The enormous majority of airplanes is designed according to this configuration all over the world.

The advantages of the normal configuration are:

- wing operates in undisturbed flow,
- length of a fuselage nose is small. It will result in reduction both area and therefore mass of vertical tail (fuselage nose brings about a destabilizing yawing moment in regard to a

vertical axis of an airplane). Besides that reduction of a fuselage nose length improves forward view.

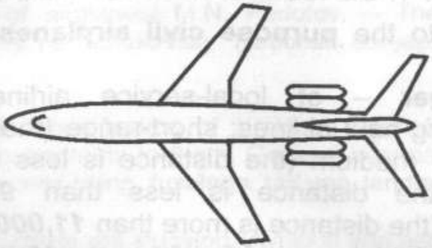

Fig. 1.1. Normal configuration airplane

The disadvantages of the normal configuration are:

– operation of a horizontal stabilizer in a flow skewed and disturbed by the wing. It considerably reduces its efficiency. This causes application of horizontal stabilizer of both greater area and (therefore) mass. The arranging of a horizontal stabilizer apart off a zone of disturbed flow (for example putting it on a vertical stabilizer) does not solve a problem as well, because mass of both vertical stabilizer and fuselage increases;

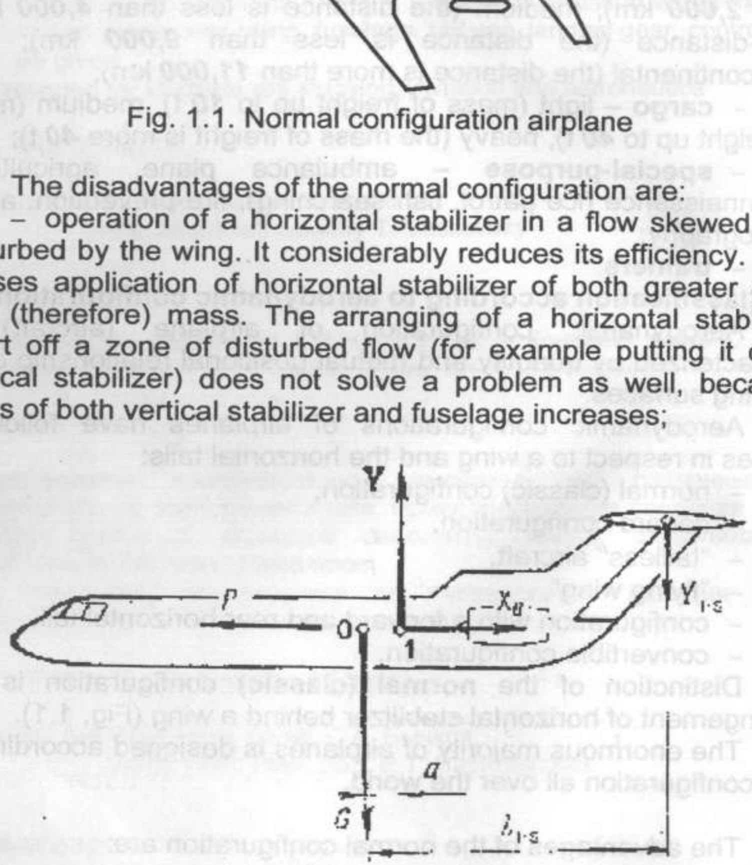

Fig. 1.2. Stable configuration of airplane

– horizontal stabilizer should produce the negative lift to provide the flight stability. It reduces total lift of airplane (it is necessary to subtract the force of horizontal stabilizer from the value of a wing lift). It is necessary to apply a wing of the increased both area and therefore mass for neutralization of this phenomenon.

Normal (classic) configuration has two kinds. There are stable and unstable configurations. Distinction of the **stable configuration** is the arrangement of a wing center of pressure (CP) **behind** a center of mass (CM) of airplane.

Distinction of the unstable configuration is the arrangement of CP in front of CM.

Enormous majority of airplanes is designed in compliance with a stable aerodynamic configuration. Only some modern fighters are manufactured in accordance with unstable configuration.

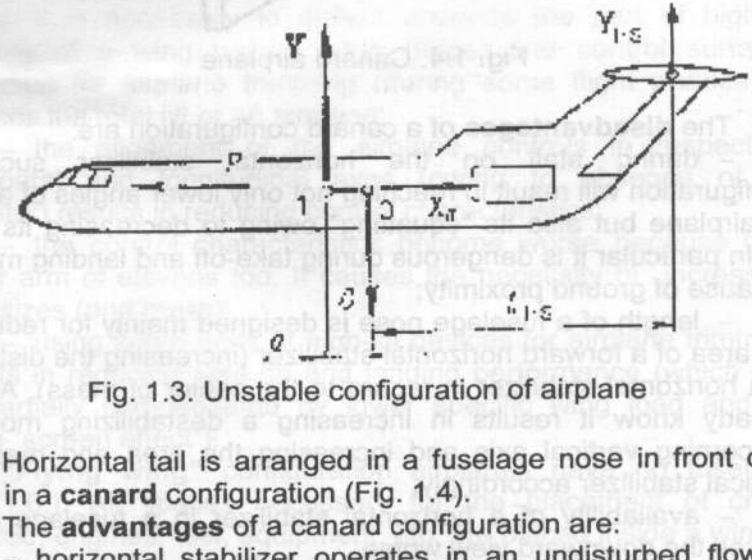

Fig. 1.3. Unstable configuration of airplane

Horizontal tail is arranged in a fuselage nose in front of a wing in a **canard** configuration (Fig. 1.4).

The **advantages** of a canard configuration are:

- horizontal stabilizer operates in an undisturbed flow. It enhances its efficiency;
- horizontal stabilizer produces positive lift to provide the flight stability. That means that it is added to the wing lift. It allows to reduce wing area and mass accordingly;
- when airplane reaches high angles of attack a stall occurs on the tail stabilizer. It reduces both its lift and the lift of the whole

airplane. In this case airplane automatically passes to smaller angles of attack that reduces probability of its deflection into a spin;

– moving of aerodynamic center backward during increase of speed on a canard configuration occurs in a smaller measure than on classic one. It results in less change of longitudinal static stability of airplane. In turn, it simplifies its control characteristics.

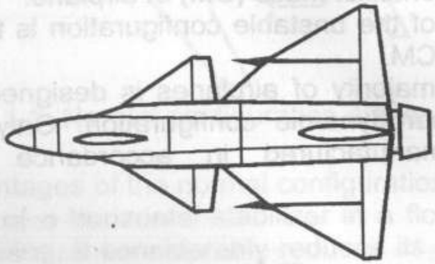

Fig. 1.4. Canard airplane

The **disadvantages** of a canard configuration are:

– during stall on the horizontal stabilizer such a configuration will result in reaching not only lower angles of attack by airplane but also its "squatting" owing to decreasing its total lift. In particular it is dangerous during take-off and landing modes because of ground proximity;

– length of a fuselage nose is designed mainly for reducing the area of a forward horizontal stabilizer (increasing the distance of a horizontal stabilizer in regard to the center of mass). As we already know it results in increasing a destabilizing moment concerning vertical axis and increasing the area and mass of vertical stabilizer accordingly;

– availability of a horizontal stabilizer in a fuselage nose makes the downward view worse.

It follows from a title of the **"tailless aircraft"** configuration that such configuration has no horizontal tail (Fig. 1.5.).

The **advantages** of such configuration are:

– decreasing a drag. It is important for airplanes with a high cruising speed (in this case fuel consumption decreases);

- high wing stillness for torsion. It improves its aeroelasticity characteristics (flutter, divergence and aileron reversal);
- high maneuvering performances.

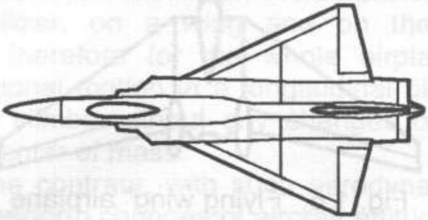

Fig. 1.5. "Tailless" aircraft

The **disadvantages** of "tailless aircraft" configuration are:

- it is necessary to deflect upwards the part of high-lift devices of a wing trailing edge (flaps) and control surfaces (elevons) for airplane trimming (during some flight phases). It reduces the total lift of an airplane;
- the alignment of the airplane controls in respect to horizontal and longitudinal axes (owing to absence of an elevator) results in reducing control characteristics;
- the control characteristics become worse because of a minor arm of elevons too. It causes the necessity of increasing their sizes (and mass);
- using some units of high-lift devices for airplane trimming results in reducing take-off and landing performance (which can be partially compensated by lower specific wing load and by using "screen effect").

"Flying wing" configuration airplanes have no fuselage (Fig. 1.6.). All spaces necessary for the placement of crew, payload, engines, fuel, equipment, etc. are placed inside a wing.

Such configuration has the following **advantages**:

- the lowest air drag;
- the lowest structural weight (in this case total weight falls on the aggregate, which produces the lift, i.e. a wing);
- destabilizing moment in regard to its vertical axis is minor (as longitudinal sizes of an airplane are small, because the fuselage is absent). It can result in essential reduction of a

vertical stabilizer and even its disappearance. Stabilization and control of airplane concerning its vertical axis can be carried out without using the vertical stabilizer.

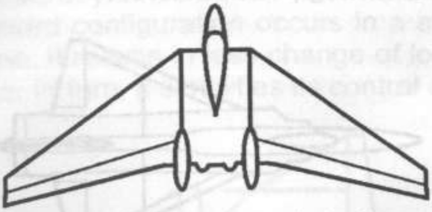

Fig. 1.6. "Flying wing" airplane

However in this case the distances from control surfaces to the center of mass in this direction are also small (there are disadvantages). It causes the complexity providing necessary stability margin and reduces control characteristics. Such airplanes need control systems on the basis of automation. The obtaining of the necessary static stability in the "tailless airplane" configuration is possible if swept or delta form is available (in this case the distance between the center of mass and center of pressure is rather considerable comparatively straight-winged one).

So-called **direct control by lift** can be used for airplanes, which have a **horizontal tail** both in the **rear** and in the **nose** of **fuselage** (Fig. 1.7).

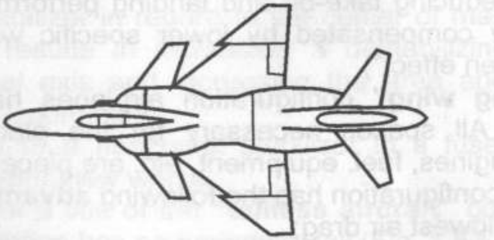

Fig. 1.7. "Tail and nose horizontal tails" airplane

In this case the nose horizontal stabilizer together with flaps produces the additional lift. The pitching moment, which emerges in this case, will be directed to increase the angle of attack (nose of an airplane goes upwards). The rear horizontal stabilizer should produce a moment for reducing an angle of attack (airplane noses down) for counteracting this moment. For this purpose the force to the rear horizontal stabilizer should be directed upwards too. That is, an increment of lift on the nose horizontal stabilizer, on a wing and on the rear horizontal stabilizer (and therefore for the whole airplane) takes place without its rotational motion in a longitudinal plane. In this case airplane simply climbs without any changes of aircraft attitude concerning its center of mass.

And, on the contrary, with such aerodynamic layout of an airplane it can perform changes of aircraft attitude concerning the center of mass in a longitudinal plane without changing the flight path. Possibility of doing such maneuvers considerably improves characteristics of maneuverable airplanes. Especially, when airplane should have not only a rear vertical stabilizer but also a nose one for realizing **lateral force control system**. Layout of an airplane with nose and rear horizontal stabilizer is applied only for military maneuverable airplanes so far.

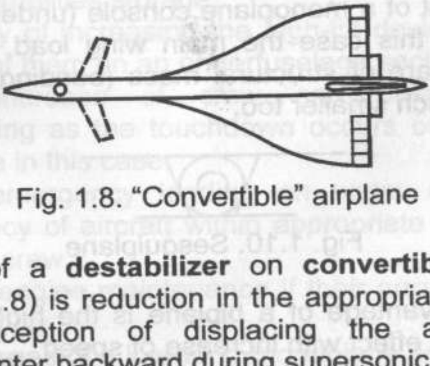

Fig. 1.8. “Convertible” airplane

Function of a **destabilizer** on **convertible** configuration airplanes (Fig. 1.8) is reduction in the appropriate boundaries or even total exception of displacing the airplane (mean) aerodynamic center backward during supersonic flight phases.

It increases the maneuvering performance of airplane (that is important for a fighter) and increases the range or reduces fuel consumption (it is important for a supersonic passenger airplane). Destabilizer is hidden amidships of the fuselage or it is set in operational mode of vane (freely orients streamwise) during subsonic flight phases.

There is a **significant number** of structural features, which can classify the airplanes.

Airplanes are divided into monoplanes and biplanes **according to the number of wings**.

The **biplane** has two wings arranged one upon the other (Fig. 1.9).

Fig. 1.9. Biplane

Lower wing is displaced backwards in regard to upper one for reducing interference drag, providing necessary center-of-gravity position and improving downward view. Such displacement has a title of a stagger and is characterized by the angle of stagger.

Main advantage of a biplane is a small mass of a wing. This is due to the fact that biplane outer wings span is considerably smaller than that of a monoplane console (under condition of the equal area). In this case the main wing load, which demands considerable share of structural mass (bending moment) for its perception is much smaller too.

Fig. 1.10. Sesquiplane

Main disadvantage of a biplane is the high drag, which in particular has an effect with increase of speed.

A variation of a biplane is the **sesquiplane** (Fig 1.10.). It has considerably smaller lower wing than upper one. A **triplane** and more **"-planes"** are history.

As a rule, modern airplanes are designed in accordance with a monoplane configuration. **Monoplane** has one wing, which generally may consist of two outer wings-left and right. Monoplane has a lower drag but higher mass in comparison with biplane. Of course each configuration has both other advantages and disadvantages but basic concept of airplanes is a monoplane for today.

Low-wing monoplane, mid-wing monoplane and high-wing monoplane are distinguished according to the arrangement of monoplane wing regarding to a fuselage (Fig. 1.11).

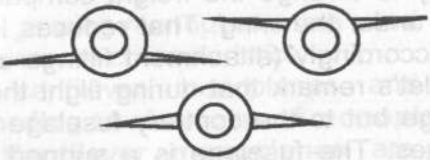

Fig. 1.11. Low-wing, high-wing, mid-wing monoplanes

Low-wing monoplane has the lower arrangement of wing concerning a fuselage. **Advantages** of such layout are as follows:

- considerable increment of lift within take-off and landing modes due to screening effect of ground;
- the smaller height of landing gear struts and this reduces their mass and simplifies storage;
- possibility of increasing the high-lift devices area thanks to arrangement of them on an underfuselage section of a wing;
- safety increase of crew and passengers during emergency landing as the touchdown occurs on a wing, which protects fuselage in this case;
- during emergency landing on water areas the wing provides buoyancy of aircraft within appropriate time that allows passengers and crew;
- ease of engine maintenance if their arrangement is on a wing.

Disadvantages of a low-wing monoplane are as follows:

- emergence of a considerable additional aerodynamic drag, which has a title of interference drag and it will be surveyed in the following sections in detail;
- deterioration of downward view;
- possibility of foreign object getting into engine air-intakes during movement along the runway;
- possibility of engine touching the runway during bank landing, because they are arranged under the wing.

Mid-wing monoplane has a wing, which is attached to a body approximately in its amidships.

Advantages of such arrangement of a wing are as follows:

- reduction of interference drag (in comparison with low-wing monoplane);
- possibility to arrange the freight compartments in a low part of fuselage under the wing. That reduces load on fuselage and its weight accordingly (attachment fittings of outer wings to it). By the way, let's remark that during flight the wing does not rest on a fuselage but to the contrary fuselage rests on a wing where lift emerges. The fuselage is a support for outer wings during take off run, taxiing on a runway and touching down at landing, that is when the support elements of landing gear (or body) are on ground (water).

Disadvantages are:

- complexity of applying the torsion box or single-block design configurations of a wing. In this case the center-wing will intersect the middle section of a passenger compartment or fuselage cargo compartment;
- deterioration of rearward view;
- increase of landing gear strut height during attaching them to a wing.

A wing is arranged on a top of a fuselage in a **high-wing monoplane**. Such layout has the following advantages:

- the lowest value of an interference drag;
- good downward view for the crew and passengers;
- the layout of passenger compartments and cargo ones inside a fuselage is simplified;
- the loading and unloading of aircraft is simplified and in this case ground transport has no necessity to go around the outer wings;
- the possibility of wing damage during loading and unloading by mechanical ways is decreased.

There are the following disadvantages of a high-wing monoplane:

- the complexity of arranging the landing gear struts on wings. Height of struts in such version will be considerable with all negative consequences;

- small track of support elements of strut bracing to a fuselage;
- necessity of additional reinforcement of a fuselage underside in this case;
- complexity of engine maintenance, which are arranged on a wing.

Most often high-wing monoplanes are used as air-freighters according to all summery characteristics.

There are cantilever monoplanes and semicantilever monoplanes **according to character of monoplane attachment** to a fuselage. **Cantilever monoplanes** are attached to a fuselage at a root section of outer wings only. **Semicantilever** monoplane is attached to a fuselage by a root section of the outer wing too but has a brace as one more additional structural element (Fig. 1.12).

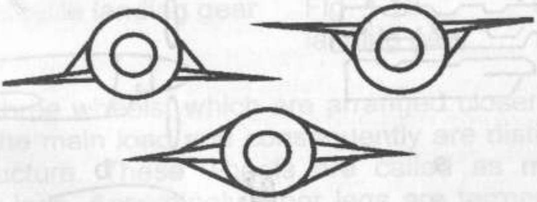

Fig. 1.12. Semicantilever monoplane

The brace is joined to load-bearing elements of a wing approximately in its middle section with one its end and to a fuselage with the other one. In this case semicantilever monoplane has much less maximum value of main load bending moment than for cantilever one. Hence weight of the first type wing is also less than the second one. But the brace is arranged in airflow and gives an additional aerodynamic drag. Therefore the configuration of an aircraft with a semicantilever monoplane is rational for low-speed airplanes only.

A **parasol** is one more configuration of a wing attaching to a fuselage for light airplanes (Fig. 1.13).

In this case wing is not attached to a fuselage directly but is arranged above it and is attached by means of a braces system.

Fig. 1.13. Parasol aircraft

According to the **engine type** the airplanes are divided into **propeller airplanes** and **jet** ones. We stress once again that the propeller airplane can be actuated by jet (gas-turbine) engine as well. Such engine is called a turbo-prop engine. The jet engines, which are used on airplanes, have various configuration (such as one-flow, double-blow, with afterburner and so on) (Fig. 1.14).

In general there are three configurations of landing gear used for airplanes.

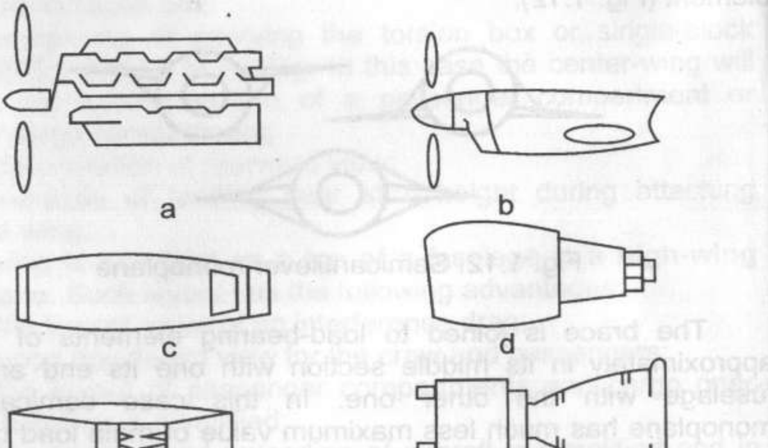

Fig. 1.14. Types of aircraft engines

If two landing gear legs are arranged in front of an aircraft center of mass and the third one is behind, then such a **tricycle-tail wheel landing gear configuration is applied** (Fig. 1.15). Now it is used only for airplanes with low landing speed.

Fig. 1.15. Tail wheel landing gear

Fig. 1.16. Nose wheel landing gear

If two legs are arranged behind a center of mass and the third one is taken backward, then a **tricycle-nose wheel landing gear configuration is used**. Nowadays such landing gear is most widespread, as it exceeds other general-arrangement configurations by its operating performance (Fig. 1.16).

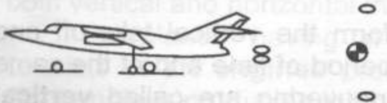

Fig. 1.17. Bicycle landing gear

Fig. 1.18. Multi-wheel landing gear

Two of three wheels, which are arranged closer to center of mass have the main load and consequently are distinguished by stronger structure. These wheels are called as **main (basic)** landing gear legs. Accordingly other legs are termed as a **nose** (sometimes as forward) strut and as a **rear** leg (tail leg, tail wheel).

Sometimes there is the landing gear of a bicycle configuration too (Fig. 1.17). In this case two rather strong struts are arranged in front of and behind center of weight in a fuselage and two auxiliary struts are arranged on wing tips or in engine nacelles.

Four-wheel landing gear and **multi-wheel landing gear configurations** are used even less often (Fig. 1.18).

Each of above-indicated configurations of landing gear has the advantages and disadvantages. They will be considered in the appropriate section. The choice of either this or that configuration is determined by type and purpose of A/C, features of its structure, operation conditions.

Take-off (or landing) **distance of** various airplanes widely ranges from zero to several kilometers. Airplanes which take-off (to be launched) from **launchers,** do not need the runways at all. **Vertical take-off** and **landing** airplanes even do not need designed sites in some cases. They are necessary only for increase of take-off and landing safety, parking and maintenance as well as for decreasing negative influence of exhaust products of their engines on environment. For short take-off and landing airplanes the runway of some hundreds meters long will be enough. Only **usual take-off-and-landing-distance** airplanes require two three kilometer runway. The cost of construction and operation of runway is very high, therefore decreasing their length is economically expedient. Besides, it is not possible to find such large spaces, which are suitable for the placement of long runways everywhere.

The vehicles, which can perform the vertical take-off and landing, hovering during particular period of time and at the same time, perform usual flight and maneuvering are called **vertical take-off and landing A/C**. Such vehicles can perform intermediate evolutive operations at vertical and horizontal speeds too. As we see the helicopter belongs to this class of A/C too. But except for helicopter there are other various A/C, which can perform the vertical take-off and landing.

Let's remark that we consider the vertical take-off and landing A/C, which use an **aerodynamic principle** of flight. These A/C can be divided into two groups. There are:

- rotary-wing A/C;
- vertical take-off and landing jets.

Such disadvantage of the helicopter as low speed can be diminished by using wings for producing lift additionally to a rotor and power plant (jet or propeller) for increasing horizontal thrust. Such A/C has a title of a **rotorcraft**. The rotorcraft have considerably higher speeds than the helicopters but yield to airplanes.

One way of airplane speed increasing (including vertical take-off and landing) is using convertiplanes.

The **convertiplane** is an adopted aircraft, which can perform take-off without landing run (Fig. 1.19). The power plant of such aircraft has thrust, which surpasses its weight. This power plant (or its engine) can be turned from a horizontal position to a vertical one. Power plant engine can rotate both itself and together with a wing. Convertiplane take-off takes place during vertical (or close to it) position of a power plant. Gradual transition of power plant into a horizontal position takes place after take-off and the flight of a convertiplane transfers usual aircraft mode.

The purpose of a convertiplane producing is to eliminate necessity of large aerodromes for take-off and landing while keeping aircraft speed ability.

Nowadays the convertiplanes are of limited utility.

In turn the vertical take-off and landing jets can also be divided as follows:

- airplanes having a **unified power plant**, which produces both vertical and horizontal thrust by veering the thrust vector;
- airplanes having a **combined power plant**, which consists of **lift engines** producing the vertical thrust and mid-flight engines producing the horizontal thrust-cruise;
- airplanes having **thrust boosters,** which are added to cruise engines and are used for producing vertical thrust.

In the first case swiveling nozzles can be used which change the thrust vector during take-off and landing phase vertically and during flight phase horizontally. Nozzles mediate during transient condition of flight.

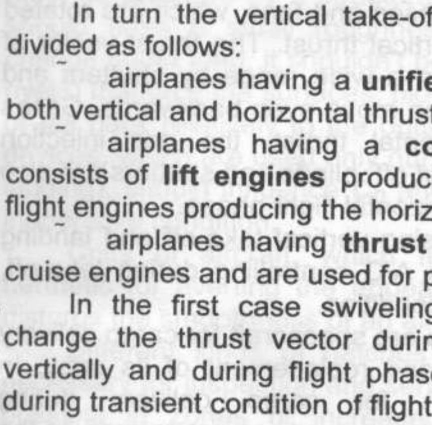

Fig. 1.19. Convertiplane

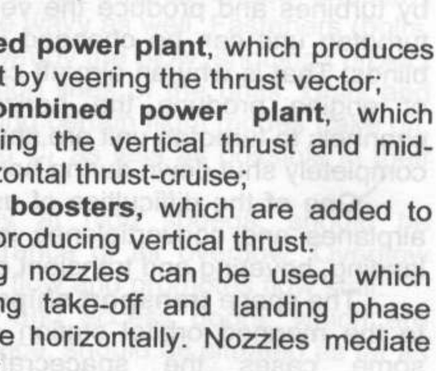

Fig. 1.20. Airplane with jacking turbofan aggregates

In the **second case** lift engines (or their exit nozzles) are arranged symmetrically in regard to an aircraft center of mass and can have small tilting to a vertical for producing a horizontal constituent of thrust, which keeps aircraft moving ahead. Thrust of the cruise engine increases during reaching appropriate speed and aircraft gradually passes to a horizontal flight phase. In this case air intakes and exit nozzles of lift engines are shut down.

In the **third case** the lift turbofan units are installed on aircraft (Fig. 1.20). They are arranged so that their summary vector of vertical thrust transited through a center of mass. The units are installed on wings and on a fuselage.

Exhaust gases of the cruise engine are directed to turbofan units by means of channels and shutters during take-off, landing and hovering modes. The turbofan units consist of turbines which are actuated by cruise engine gases and fans, which are rotated by turbines and produce the vertical thrust. The thrust vector of turbofan unit can be changed in a wide range by shutters and blinds. That is why an aircraft can move even backwards. Gases of engine produce the horizontal thrust, the gas injection channels to turbofan unit are shut off, blinds and shutters are also completely shut down during horizontal flight phase.

One of the difficulties of using vertical take-off and landing airplanes and convertiplanes is A/C controlling during take-off, landing, hovering and transient condition.

The space **transport ships** are spacecraft for cargo delivery to the manned orbital station and replacement of its crew. In some cases the spacecraft for cargo delivery during implementation of lunar or planetary expedition are termed as the transport ships.

Fig. 1.22. Spacecraft

Nowadays the reusable transport spacecraft are used as well (Fig. 1.22).

Chapter 2. GENERAL REQUIREMENTS FOR AIRCRAFT STRUCTURE

Aerodynamic requirements

Definite values of the coefficients $\boldsymbol{c_D}$, $\boldsymbol{c_L}$ and value $\boldsymbol{K} = C_l / C_d$ must be provided by a structure. Therefore, the surface of units should have a small roughness, its original shape shouldn't change under load, it shouldn't be wavy as well. Fasteners (bolts, rivets) that face the surfaces, blown by the blow, shouldn't project or fall back relatively to the outside lines of the units. Units and devices, which are used only during certain flight modes (take off, landing), should influence $\boldsymbol{C_D}$ and $\boldsymbol{C_L}$ as less as possible in their inoperative condition.

Units of aircraft, which fly at high speeds, should be hermetic for averting the appearance of air overflow. Overflow disturbs the smoothness of an air flow and promotes flow stall.

Different kinds of hatches and access doors, which are necessary for inspection and service, should be situated as far as possible in zones of increased pressure, but in no way in rarefaction zones. The units which do not carry aerodynamic load should be removed from the surfaces, which are blown by airflow. In case when it is impossible they must be closed by fairings.

The strength and stiffness requirements

Strength and stiffness requirements are unconditional, so they should be met primarily, without any exceptions.

The A/C design should withstand all kinds of loads in accordance with AR. AR provide different loading conditions – during take-off, flight, landing and motion on the runway.

Bending and torsional stiffness properties of the units and their arrangement layout should eliminate the probability of appearing the divergence, flutter and other dangerous kinds of oscillations.

The stress in the members of structural units should not exceed the values of elasticity limit for their materials. The absolute values of units elastic deformation should not result in malfunction of the functioning modes (e.g. elastic bending of a control surface under airflow load should not result in its locking). Stress in units which work in conditions of alternating loads should provide determined properties of a fatigue strength.

Strength requirements are met by following general design approaches:

- usage of high-strength materials;
- decrease of a stress concentration;
- hardening of surface layers of members materials;
- usage of special high-resource fasteners;
- usage of special coatings for structural members;
- as an extreme measure – increase of cross-section area of members.

The stiffness of structure is characterized by its ability to be deformed under the action of outside loads. Consequences of low stiffness are: large deformations - sags, angles of twist, buckling. The great deformations result in the following negative cases:

- change of exterior forms;
- deterioration of aircraft stability and controllability;
- origin of dangerous vibrations.

Stiffness requirements are met by the following general design solutions (approaches):

- usage of materials with high modulus of elasticity;
- rational choice of semi-finished items and blanks;
- installation of special stiffness;
- rational choice of constructive members shape .

Manufacture adaptability requirements

Manufacture adaptability is a structure property, which allows to manufacture it as quickly as possible with the least expenses of material and man-power resources. And finally – with a low manufacturing cost price.

Units design and their members should promote the usage of advanced manufacturing technologies, which allow to mechanize and automatize the manufacturing process.

Manufacture adaptability requirements are met by the following design approaches:

- simplicity of units shape
- usage of line surfaces;
- partitioning structure into parts;
- usage of readily treated materials ;
- assignment of rational manufacturing technology ;
- choice of a rational method of members joint;
- extensive introduction of normalized and standard components and parts;
- reduction (as far as reasonable) of the requirements for accuracy and surface roughness;
- unification of parts and assemblies.

Operational requirements

Operational requirements may be divided into three sections:

1. Sufficient access to units and assemblies for periodical inspections, repairing and replacement. The design approaches are:
   - installation of observation and assembly connectors, hatches and access doors;
   - installation of supporting platforms and assemblies for lifting and transportation;
   - installation of removable units and assemblies;
   - unification of units and assemblies;
   - succession of ground-based equipment.
2. The possibility of quick loading-unloading. The design approaches are:
   - installation of hatches-ladders;
   - installation of overhead-track hoist;
   - installation of roller conveyers;
   - adjusting the undercarriage leg height.
3. The possibility of operation under different weather conditions and storage in open air during all service life. The~design approaches are:
   - usage of environment resistant materials;
   - applying corrosion-resistant and protective coatings.

Reliability and survivability requirements

Reliability is the structure ability to perform its functions with preservation of the operation indicators during the established service life.

Reliability depends on:

- structure complexity;
- manufacturing quality (workmanship);
- operating conditions.

General constructive ways to meet these requirements are:

- redundancy;
- duplication;
- inspection ability.

Survivability is structure ability to perform its functions under a partial damage. The general design approaches are:

- rational choice of constructive and bearing schemes;
- statically indeterminate systems usage;
- dividing design units into parts;
- load-bearing members dispersal.

Ecological requirements

They consist in reduction of aircraft unfavorable effects on the environment. There are two types of harmful effects of an aircraft on the environment:

- noise;
- atmospheric pollution.

Both effects on the environment are produced by engines. Therefore the solution of this problem is worked out by the designers of aircraft engines.

Minimum mass requirements

It is not difficult for a competent designer to meet all above stated general requirements. But all these requirements should be met with a minimum mass both of units and components. And this problem becomes the most difficult.

The general constructive approaches are directed to meeting above stated general requirements for an aircraft. They will be considered in detail in the course “Airplane units design”.

Contradictions of requirements

Analysis of requirements to aircraft units structure testifies that some constructive approaches coincide for meeting different requirements. E.g., strength and stiffness requirements conform to reliability and survivability requirements. Manufacture adaptability requirements and operation requirements coincide too. But there are only few examples. Opposite examples are more typical: the requirements do not coincide.

All requirements conflict with one of the main requirements – a minimum mass requirement. Aerodynamic requirements conflict with operation, survivability, manufacture adaptability requirements and so on.

Therefore, it is impossible to meet all requirements completely even theoretically. So there exists the necessity of the **variant design** (alternative design). Dozens, and even hundreds of structure variants are worked out. A final decision is taken only after a thorough experimental examination or even after thorough operational tests. By the way this decision is often not final. The structure is often completed already in the process of operation.

During the aircraft development we should always find a reasonable compromise, some optimal solutions. There is no uniqueness here, so there exists such a variety of aircraft structures.

Above stated requirements have a general pattern. More concrete requirements for aircraft as for transport facilities are given in special requirement specifications – "Aviation Rules" - AR. No aircraft should be admitted to operation without examination to meeting these requirements. Such an examination is called certification. Certification is fulfilled by special organizations. Only after receiving a certificate an aircraft can be set for quantity production.

Aircraft existence equation

For an analysis and a comparative estimate of different structure approaches we can use the formula for determination of aircraft take-off mass:

$$m_o = m_k + m_{ep} + m_f + m_{eq} + m_c + m_{cr}$$

where m_o – aircraft take-off mass;
m_k – aircraft structure mass;
m_{ep} – propulsion system mass;
m_f – fuel mass;
m_{eq} – equipment mass;
m_c – useful load mass;
m_{cr} – crew mass (in a general case this is auxiliary load mass).

This equation is called **mass balance equation.**

If we divide all the terms of this equation by m_o, we will receive the following equation:

$$1=\overline{m}_k+\overline{m}_{ep}+\overline{m}_f+\overline{m}_{eq}+\overline{m}_c+\overline{m}_{cr}.$$

This equation is called an **aircraft existence equation.** It connects units masses and masses of components of a total aircraft take-off mass, and hereby all aircraft properties, which are given by these masses.

At given level of aircraft equipment development, a quantitative increase of any aircraft property causes the increase of a relative mass, which provides this property. But as the sum of relative masses is equal to **1**, the increase of one of them may only be obtained only at the expense of decreasing another mass (under the condition that take-off mass $m_o = const$). Therefore, if we increase any aircraft performance quantitatively, without a doubt, we decrease another performance, or other ones. If we don't do it, a relative masses sum will be greater than **1**. It testifies that at a given level of aircraft equipment science and development we can't make an aircraft with the set of performances like this. If we take away the limitation $m_o = const$, the change of aircraft performances may be received not only at the expense of mass redistribution, but at the expense of a take-off mass change. The value of take-off mass can be written as the following equation:

$$m_0=\frac{m_c+m_{cr}}{1-(\overline{m}_k+\overline{m}_{ep}+\overline{m}_f+\overline{m}_{eq})}.$$

Table 2.1. Mass ratio of airplanes

Aircraft purpose	$\overline{m}_k$	$\overline{m}_{ep}$	$\overline{m}_{eq}$
Subsonic light airplanes	*0.30...0.32*	*0.12...0.14*	*0.12...0.14*
passenger middle	*0.28...0.30*	*0.10...0.12*	*0.10...0.12*
heavy	*0.25...0.27*	*0.08...0.10*	*0.08...0.10*
Supersonic passenger	*0.20...0.24*	*0.08...0.10*	*0.07...0.09*
Multipurpose airplanes for local airlines	*0.29...0.31*	*0.14...0.16*	*0.12...0.14*
Sporting	*0.32...0.34*	*0.26...0.30*	*0.06...0.07*
Agricultural special	*0.24...0.30*	*0.12...0.15*	*0.12...0.15*
Light seaplanes	*0.34...0.38*	*0.12...0.15*	*0.12...0.15*
Powered gliders	*0.48...0.58*	*0.08...0.10*	*0.06...0.08*
Maneuver	*0.28...0.32*	*0.18...0.22*	*0.12...0.14*
Other flying vehicles, light	*0.26...0.28*	*0.10...0.12*	*0.10...0.12*
middle	*0.22...0.24*	*0.08...0.10*	*0.07...0.10*
heavy	*0.18...0.20*	*0.06...0.08*	*0.06...0.08*
Transport cargo type light	*0.30...0.32*	*0.12...0.14*	*0.16...0.18*
middle	*0.26...0.28*	*0.10...0.12*	*0.12...0.14*
heavy	*0.28...0.32*	*0.08...0.10*	*0.06...0.08*

The change of one of the components of relative masses causes the change of take-off mass.

Statistic average values of masses ratio for different types of aircraft are given in table 2.1.

Fuel relative mass values are within the limits of ***0.25…0.30***.

The conclusions of a given analysis for aircraft existence equation are the following:

For a given level of aircraft engineering development there can't be some values of aircraft parameters and performance. Quantitative changes of some parameters and performance without a doubt occur at the expense of other parameters or take-off mass change. A complex set of their values should satisfy the aircraft existence equation.

Chapter 3. AIRCRAFT WINGS

The wing **is intended** for creation of aerodynamic lift. Except for this main purpose, the wing provides lateral stability, and with the help of ailerons, which are located on them, lateral controllability. On airplanes of the scheme «tailless aircraft»configuration the wing provides longitudinal stability and controllability.

The internal volumes of a wing are used for accommodation of fuel in both tanks, which represent pressurized sections of a wing design. Inside a wing the units and different devices, equipment may be located. On some airplanes engines may be located in the wing. The engines, undercarriage legs, pylons for armament also can be located on the outside of the wing.

Except for the indicated general requirements to units of A/C, **the requirements** are made to the wing according to its purpose:

- the least aerodynamic drag as possible;
- the greatest increment of a lift coefficient with application of high-lift devices;
- providing stability and controllability characteristics on all flight phases;
- the character of changing aerodynamic and controllability characteristics and supercritical angles of attack should be gradual, smooth but not abrupt in any way;
- the moving of a wing aerodynamic center at increase of a flying speed should be as small as possible.

Up to ***15 %*** of an airplane weight and up to ***50 %*** of its drag fall to the wing share.

Geometrical parameters

The wing can be described by both dimensional and dimensionless parameters. The chords ***b***, the wing area S_W, the sweep angle χ, the angle cross-sectional (transversal) «V» - ψ, the span ***L*** are dimensional parameters.

One of the most important parameters of a wing is its span, distance between planes, which are parallel to a symmetry plane of a wing (Fig. 3.1). It is one of airplane overall dimensions.

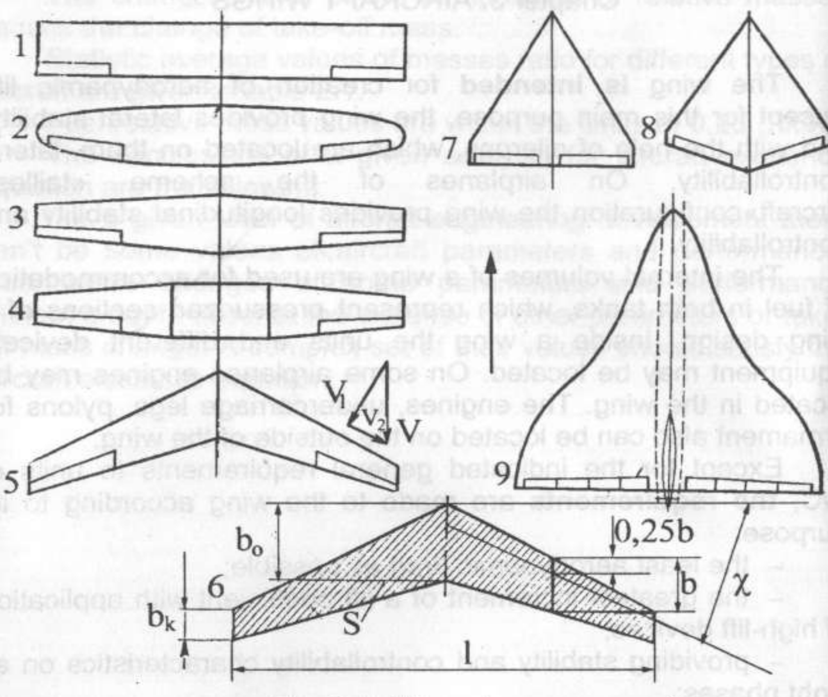

Fig. 3.1. Wing shapes

The chords ***b*** are important geometrical characteristics of a wing: root ***b₀*** and tip ***bₖ***.

Two angles will be used for determining a wing sweep:

- sweepback angle at leading edge,
- sweepback angle by ***1/4*** chord line.

The leading edge sweep angle is the angle between the plane perpendicular to the central chord and leading edge line of a wing. The sweep angle is considered positive, if the deviation of the wing panels from the indicated plane is descended backward by a blow .In such case it is spoken about "sweepback". Thus, it is supposed, that "sweep forward" is possible, when the sweep angle is negative. In this case panels are directed forwards – against a flow.

The sweep angle on a ***1/4*** chords line is determined similarly.

The angle is determined at ***1/4*** chords ($\chi_{1/4}$ or $\chi_{0.25}$) for subsonic airplanes. The angle χ is determined on a leading edge (χ_{LE}) for supersonic airplanes.

The reason is that the aerodynamic center axis is located approximately on ***1/4*** chords. It has great influence on the wing characteristics and, thus, the whole airplane at subsonic speeds. The shock waves have great influence on aerodynamic characteristics of an airplane at supersonic speeds. Their parameters are determined by arrangement concerning the flow to the wing leading edge.

Generally a sweep angle can be changed along wing span.

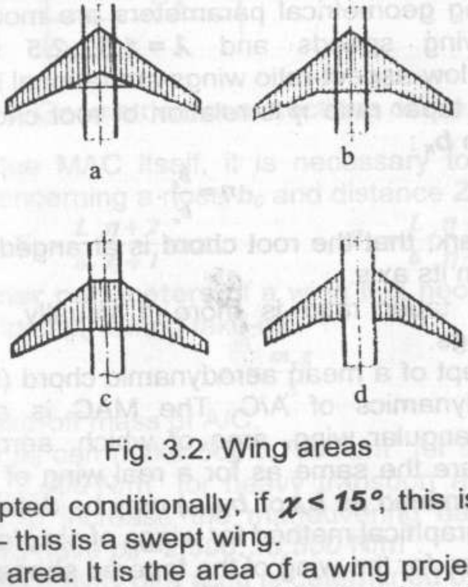

Fig. 3.2. Wing areas

It is accepted conditionally, if $\chi < 15°$, this is tapered wing, and if $\chi > 15°$ – this is a swept wing.

The wing area. It is the area of a wing projection on a base plane ***x0z*** at a zero angle of attack (Fig. 3.1, item 6).

The area is distinguished by geometrical indications:

- trapezoidal part of a wing (sometimes triangular) (Fig. 3.2, a);
- total wing area (Fig. 3.2, b);
- carrying wing area (Fig. 3.2, c);
- washed wing area, which is in a flow (Fig. 3.2, d).

It is supposed in all our calculations, that the term «wing area» means the area with regard to fuselage portion.

There are two dimensionless relative parameters – under fuselage section aspect ratio wing and wing taper ratio.

The wing aspect ratio is determined as relation of a span square to the area

$$\lambda = \frac{L^2}{S}.$$

The aspect ratio for a rectangular wing, which has constant chord

$$\lambda = \frac{L}{b}.$$

The value of wing aspect ratio reaches **30** for record gliders; $\boldsymbol{\lambda = 7...10...}$ for subsonic passenger airplanes.

Other wing geometrical parameters are more important for supersonic flying speeds and $\boldsymbol{\lambda = 1.5...2.5}$ for supersonic airplanes. The low-aspect-ratio wings are rational in this case.

The wing taper ratio $\boldsymbol{\eta}$ is relation of root chord length $\boldsymbol{b_0}$ to tip chord length $\boldsymbol{b_\kappa}$:

$$\eta = \frac{b_0}{b_\kappa}.$$

Let's remark, that the root chord is arranged not onboard a fuselage, but on its axis.

The wing taper ratio is more **1** usually, $\boldsymbol{\eta = 1}$ only for rectangular wings.

The concept of a mean aerodynamic chord (MAC) is widely used in aerodynamics of A/C. The MAC is a chord of an equivalent rectangular wing, area of which, aerodynamic force and moments are the same as for a real wing of any shape. Its value (it is determined as $\boldsymbol{b_A}$ or $\boldsymbol{b_{MAC}}$) may be determined both by analytical and graphical method for wings of simple shape.

In particular, for the wing of the tapered shape:

$$b_A = \frac{2}{3} b_0 \left[1 + \frac{1}{\eta(1+\eta)} \right].$$

The examples of geometrical construction of a MAC are adduced in Fig. 3.3.

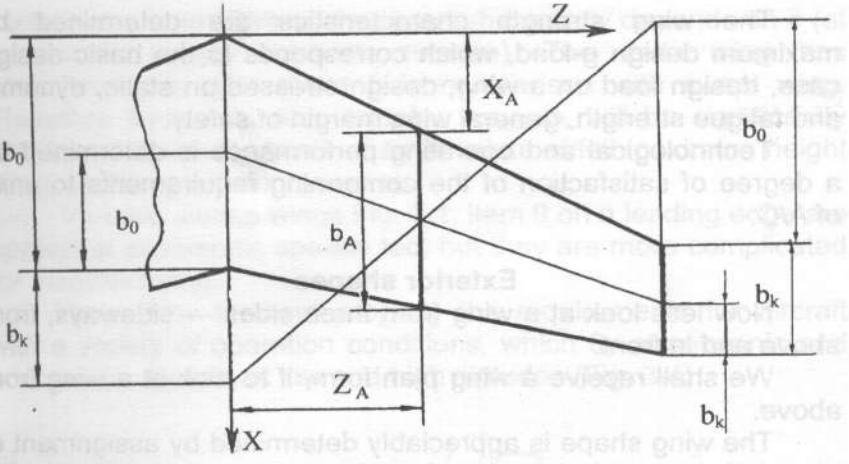

Fig. 3.3. Geometrical constructions of the MAC

Except value MAC itself, it is necessary to determine its coordinate X_A concerning a nose b_0 and distance Z_A from b_0:

$$X_A = \frac{L}{6}\left(\frac{\eta + 2}{\eta + 1}\right) tg\chi_{LE}; \qquad Z_A = \frac{L}{6}\left(\frac{\eta + 2}{\eta + 1}\right).$$

Among **other parameters** of a wing it is necessary to mark a wing specific load p_0 during take-off

$$p_0 = \frac{m_0 g}{S}$$

where m_0 – a take-off mass of A/C.

The value p_0 can make ***500...700*** N/m^2 for small airplanes, and p_0***=6,000...7,000*** N/m^2 for heavy transport airplanes. Value p_0 is reduced to increase the maneuvering data of A/C. For example, fighters have p_0 ***=2,500...3,500*** N/m^2.

The specific gravity of a wing is determined by relation

$$q_w = \frac{m_w g}{S}.$$

Value q_W equals approximately ***200...300*** N/m^2 for subsonic airplanes and for supersonic airplanes – up to ***450*** N/m^2. The application of polymer composite materials considerably reduces the weight characteristics of wings.

The wing aeroelasticity characteristics include possible critical speeds of aileron reverse, flutter, divergence.

The wing strength characteristics are determined by maximum design g-load, which corresponds to the basic design case, design load on a wing, design stresses on static, dynamic and fatigue strength, general wing margin of safety.

Technological and operating performance is determined by a degree of satisfaction of the conforming requirements to units of A/C.

Exterior shapes

Now let's look at a wing from three sides — sideways, from above and in front.

We shall receive a wing plan form, if to look at a wing from above.

The wing shape is appreciably determined by assignment of an airplane, and its selection for many reasons remains compromise. As a rule, the wing is symmetric concerning A/C vertical plane ***x0y***.

The following wing plan forms are distinguished (Fig. 3.1).

Rectangular wing (Fig. 3.1, item 1) was applied in the beginning of aviation development. It is applied in a general aviation now. The main advantage of such wings is the manufacturing simplicity and that the stall starts in a wing root section earlier.

Elliptical wing (Fig. 3.1, item 2) is the most expedient for the aerodynamic characteristics, because it has the lowest drag and high lift-to-drag ratio at subsonic speeds. However its complicated shape makes expensive its manufacturing, therefore now it is almost not applied.

Tapered wing (Fig. 3.1, item 3, 4) is close to elliptical one according to the aerodynamic characteristics, at the same time it is simple for manufacturing. Therefore it has gained broad application.

Swept wing (Fig. 3.1, item 5) has found its application, when aviation has approached a «sound barrier». Such wing shape (actually with the other ways) has allowed aircraft to overcome this obstacle. The swept wings are the most used for airplanes, which develop high subsonic and low supersonic speeds.

Delta wing (Fig. 3.1, item 7, 8) is applied for supersonic speeds. As we know, the wave drag is of great importance on such flight phases. Wave drag has substantially depends on *c* (at supersonic speed quadratic relation). The delta wing has considerably greater chord ***b*** in comparison with swept wing. Therefore thickness ratio, equal $c = c_{max}/b$, will be significantly smaller (at identical values of an absolute airfoil maximum height c_{max}), and drag will decrease too.

Variable sweep wings Fig. 3.1, item 9 on a leading edge are applied at supersonic speeds too, but they are more complicated for manufacturing.

They allow to meet properly the requirements for aircraft with a variety of operation conditions, which fly at subsonic and supersonic speeds, at low and high altitudes (Fig. 3.4).

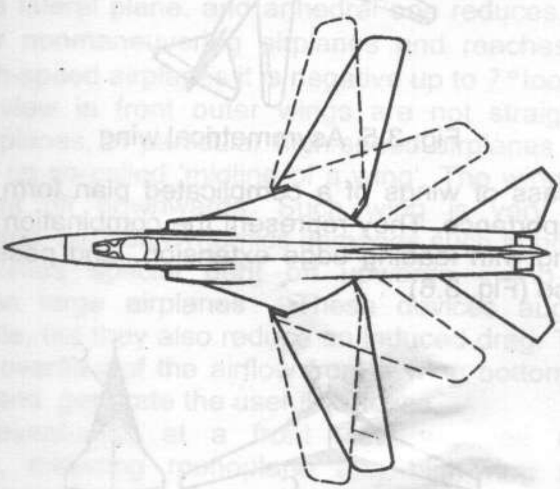

Fig. 3.4. Variable geometry wing in flight

Take-off, landing, long-distance flight, air alert and other modes with low speeds of flight are performed by wings, set for a minimum sweep angle. Thus the greatest values of span and aspect ratio of a wing are provided. An induced drag decreases accordingly and the lift-to-drag ratio is augmented.

The wings are transferred to maximum sweep angle to increase airplane speed by providing wave drag reducing. It is not so important that lift-to-drag ratio decreases.

A rotary asymmetrical wing (Fig. 3.5), unlike all other wings has no vertical symmetry plane and also different versions of X-similar wings should be attributed to the variable-shape wings.

Fig. 3.5. Asymmetrical wing

The class of wings of a complicated plan form is of great practical importance. They represent the combination of an initial tapered wing with leading edge extension and possible trailing edge one too (Fig. 3.6).

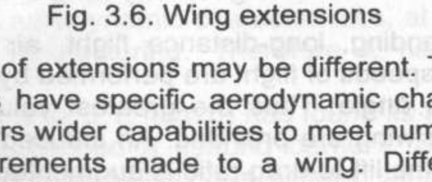

Fig. 3.6. Wing extensions

The shape of extensions may be different. The complicated plan form wings have specific aerodynamic characteristics and give the designers wider capabilities to meet numerous and often conflicting requirements made to a wing. Different wing plan forms find application in practice.

If take a look at a wing in front, then it is easy to note, that its outer wings often are bent off from a horizontal plane ***y0z*** at a moderate angle. So it is called — the dihedral and anhedral angle (sometimes the term "anhedral angle V" is used). It is designated as ψ (Fig. 3.7, 1 - fuselage, 2 - wing, 3 - waterline of an airplane).

Fig. 3.7. Wing dihedral angle

Angle can be both positive (dihedral angle) and negative (anhedral angle). The dihedral angle augments stability of an aircraft in a lateral plane, and anhedral one reduces. Value ψ is positive for nonmaneuvering airplanes and reaches up $5...7^\circ$, and for high-speed airplanes it is negative up to 7° too.

At a view in front outer wings are not straight lines for modern airplanes, in particular high-speed airplanes. They have the curved up so-called 'midline of a wing'. The wing tips are as though bent off downwards. Such wing is very difficult for manufacturing, but aerodynamics demands such approach.

Sometimes special bent off upwards «wing-tips » are mounted on large airplanes . These devices augment wing weight a little, but they also reduce an induced drag. The devices are hinder overflow of the airflow from a wing bottom surface to upper one and generate the useful vortexes.

And eventually, at a front view we see a low-wing monoplane, mid-wing monoplane and high-wing monoplane. Their features were already considered.

At a side view we shall see the thing, already familiar to us, – a wing airfoil.

The airfoils are subdivided into three classes according to thickness ratio:

- thick $c > 12\ \%\ (0.12)$,
- mean $12\ \% > c > 6\ \%\ (0.12 > c > 0.06)$,
- thin $c < 6\ \%\ (c < 0.06)$

Usually value $c = 8...20\ \%$ is for sub – and transonic airplanes, $c = 3...9\%$ is usually for supersonic airplanes.

Generally the increase of thickness ratio results in increase of an aerodynamic drag generally. However at subsonic speeds in a number of cases in range of thickness ratio ***5...12 %*** lift can increase faster than drag. It makes such airfoils more advantageous. Therefore wings of airplanes with subsonic flight speeds usually have thicker airfoils, than supersonic airplanes. The application of thinner wings at supersonic flying speeds is due to necessity of lowering a wave drag.

The airfoil concavity augments lift at subsonic flight speeds. This phenomenon is widely used in aircraft. For example, during take-off and landing modes camber (concavity) is increased by deflecting tail (or nose) part of an airfoil downwards, that allows to lower landing or take-off speed.

Maximum relative concavity of airfoils, optimum for subsonic speeds reach the values ***f = 1.5...2.5%***

At supersonic flying speeds the presence of a concavity does not augment lift practically, therefore ***f = 0...2 %***. for supersonic flying speeds

The characteristics of airfoils (geometrical and aerodynamic), which are applied while designing and manufacturing different airplanes, are given in special reference books.

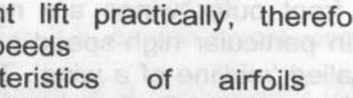

Fig. 3.8. Shock wave on a supercritical airfoil

The shape the a main portion of an airfoil contour is various for sub-, trans- and supersonic flight speeds.

The so-called "supercritical airfoils" were designed for high subsonic speeds. They have the high aerodynamic parameters even at presence of supersonic zones. The peculiarity of these airfoils is almost flat upper airfoil without obviously expressed zone of maximum depth, where the occurrence of shock waves is most possible. In this case shock wave is not intensive, it

Generally the increase of thickness ratio results in increase of an aerodynamic drag generally. However at subsonic speeds in a number of cases in range of thickness ratio ***5...12 %*** lift can increase faster than drag. It makes such airfoils more advantageous. Therefore wings of airplanes with subsonic flight speeds usually have thicker airfoils, than supersonic airplanes. The application of thinner wings at supersonic flying speeds is due to necessity of lowering a wave drag.

The airfoil concavity augments lift at subsonic flight speeds. This phenomenon is widely used in aircraft. For example, during take-off and landing modes camber (concavity) is increased by deflecting tail (or nose) part of an airfoil downwards, that allows to lower landing or take-off speed.

Maximum relative concavity of airfoils, optimum for subsonic speeds reach the values $f = 1.5...2.5\%$

At supersonic flying speeds the presence of a concavity does not augment lift practically, therefore $f = 0...2\ \%$. for supersonic flying speeds

The characteristics of airfoils (geometrical and aerodynamic), which are applied while designing and manufacturing different airplanes, are given in special reference books.

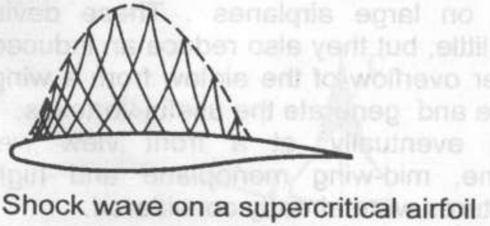

Fig. 3.8. Shock wave on a supercritical airfoil

The shape the a main portion of an airfoil contour is various for sub-, trans- and supersonic flight speeds.

The so-called "supercritical airfoils" were designed for high subsonic speeds. They have the high aerodynamic parameters even at presence of supersonic zones. The peculiarity of these airfoils is almost flat upper airfoil without obviously expressed zone of maximum depth, where the occurrence of shock waves is most possible. In this case shock wave is not intensive, it appears as though "fuzzy", and wave component of general aerodynamic drag decreases (Fig. 3.8).

The S-shaped bending of an airfoil tail is the other peculiarity of supercritical airfoils. Such airfoils have great critical numbers ***M**** (on ***0.05...0.15***) in comparison with the classical speed airfoils.

Usage of these airfoils in the layout of swept wings allows to increase a wing depth without decreasing a flight speed. It eventually allows to reduce fuel for passenger and transport airplanes.

The special airfoils are applied for supersonic speeds. Their shape provides lowering local disturbances. The trailing edge of an airfoil is usually made tapered, but sometimes it has final depth. For example, the efficiency of controls depends on it.

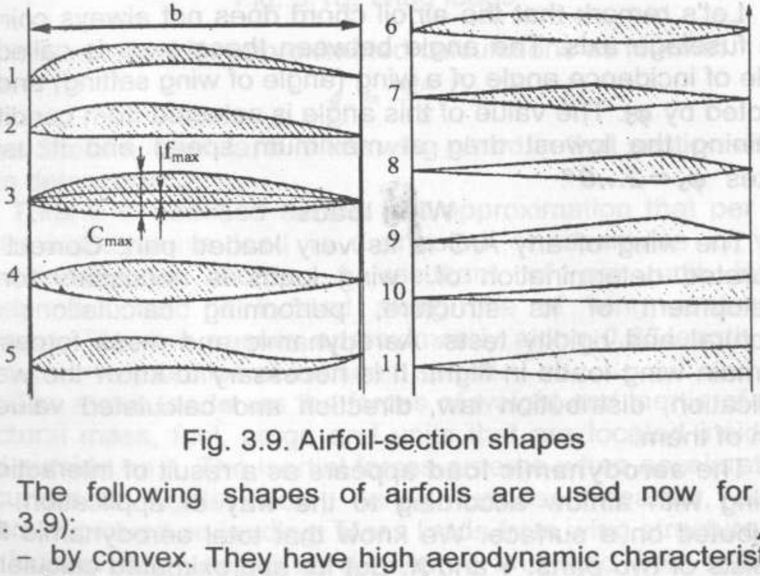

Fig. 3.9. Airfoil-section shapes

The following shapes of airfoils are used now for A/C (Fig. 3.9):

- by convex. They have high aerodynamic characteristics at moderate subsonic speeds, when the air compressibility effect is insignificant;
- convex-concave. They have high lift ability and are applied to the airplanes with low speeds. Their application became inexpedient with increase of speeds owing to high drag;

– -laminar flow. Its maximum depth is taken from a nose to back on longer distance than for usual airfoils. They demand heightened quality of wing surface treatment ;

– symmetrical. They have the lowest drag at high subsonic speeds and are applied for wings of subsonic airplanes and for tail units of the majority of A/C;

– wedge-shaped. They have the lowest drag at high supersonic (hypersonic) speeds;

– double-wedge. They are theoretically the most expedient for supersonic speeds;

– lenticular airfoils have acute edges;

– supercritical. We have already considered their features. They are applied for airplanes with high subsonic speeds,

– S-section, so-called self-stable, shapes are applied for A/C such as "flying wing" and "tailless" aircraft.

Let's remark that the airfoil chord does not always coincide with fuselage axis. The angle between these axes is called the angle of incidence angle of a wing (angle of wing setting) and it is denoted by φ_3. The value of this angle is selected from conditions obtaining the lowest drag at maximum speed and it usually makes $\varphi_3 = 2...0^\circ$.

Wing loads

The wing of any A/C is its very loaded part. Correct and accurated determination of wing loads is necessary for the development of its structure, performing calculations and structural and rigidity tests. Aerodynamic and mass forces are the main wing loads in flight. It is necessary to know the way of application, distribution law, direction and calculated value for each of them.

The **aerodynamic load** appears as a result of interaction of a wing with airflow according to the way of application. It is distributed on a surface. We know that total aerodynamic force consists of two parts: Y and X. But for approximated calculations the value X can be neglected, as this force acts in a plane wing chords. In such direction the wing has maximum stiffness. The value of the calculated (destroying) aerodynamic force is determined according to the below formula

$$P = Y = m\,g\,n^e\,f$$

where ***m*** is an aircraft mass, ***n*^e** is a maneuvering-load factor, ***f*** is a safety margin.

Usually **per unit length aerodynamic load *q_w*** i.e. load, which is fallen per unit length of wing (Fig. 3.10) is used when load and operation of wing structure are considered.

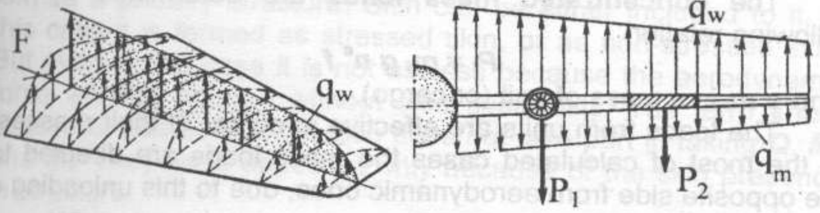

Fig. 3.10. Wing loads

It is admitted for approximated calculations as follows:

$$q_w = \frac{mgn^e f}{S} b$$

where ***S*** is a wing area, ***b*** is the wing chord in that section where q_w is determined.

Thus it is admitted as the first approximation that per unit length aerodynamic load is distributed on spanwise of wing proportionally to chords. A resultant of per unit length aerodynamic load is located along line of wing centers of pressure. This line passes approximately along ***0.25*** length of a chord in a wing section at subsonic speed.

The **mass loads** are the forces of weight and inertia of wing structural mass, fuel, cargo and units that are located inside or fixed outside on it. The inertial forces emerge when accelerations in curvilinear flights occur, during turbulent weather, during impact of ground on landing. Mass loads from wing structure and fuel located in it called as distributed and load from units as concentrated.

It is possible to consider **per unit length mass loads** of a wing structure to the first approximation as distributed proportionally to chords (as well as aerodynamic load) therefore we shall have

$$q_M = \frac{m_M g n^e f}{S} b,$$

where m_M is a mass of a wing.

Resultant of per unit length mass forces is effective along the line of wing mass centers and passes approximately at ***0.45*** chords.

The **concentrated mass loads** are determined by the following relation

$$P_i = m_i\, g\, n^e f$$

where m_i is a mass of unit (or cargo).

The loads from units are effective in center of their masses. In the most of calculated cases the mass loads are directed to the opposite side from aerodynamic ones, due to this unloading a wing takes place.

Summery load per unit of length q_Σ is determined as a difference between q_W and q_M:

$$q_\Sigma = q_W - q_M = \frac{(m - m_M) g n^e f}{S} b$$

Lateral force Q, bending moment M_b and torque M_t act to a wing from effects of external loads. They cause the normal stresses σ (both stretching and compression) and shearing stress τ in structural members. And primary structural members of a wing structure should withstand all these stresses.

Structure and operation of the main load-bearing members

All members of structures can be divided into load-bearing members (main structural members) and non-bearing ones.

Load-bearing members are intended for taking and transmission of various force influences and loads. In standard conditions the minor loads act to **non-bearing** members and so there are no reason to calculate such structure for strength.

Many various requirements are placed upon load-bearing structures of airplanes. Two of them are fundamental:

- specified strength (not "maximum" but specified, no more and no less);
- minimum mass (which provides specified strength).

Besides that, a number of particular requirements such as keeping exterior shape, rigidity, manufacturability, reliability and many others should be provided but the specified strength should be provided unconditionally and irrespective of any other requirements.

As it was already mentioned, the aircraft structure is intended for taking various force factors such as lateral force ***Q***, torque $\boldsymbol{M_t}$ and bending moment $\boldsymbol{M_b}$, which act on its various units. The constituents of the unit taking these basic force factors are termed a primary structure. Skin can be either included to it, in this case it is termed as stressed skin, or as non-stressed skin. But even in this case it is not useless because the aerodynamic force will not emerge without skin availability. The term «non-stressed» tells us that the skin does not take part in taking ***Q***, $\boldsymbol{M_b}$ and $\boldsymbol{M_t}$. They have appeared only because of the skin presence in structure!

Wing load-bearing structure consists of longitudinal and transverse frameworks.

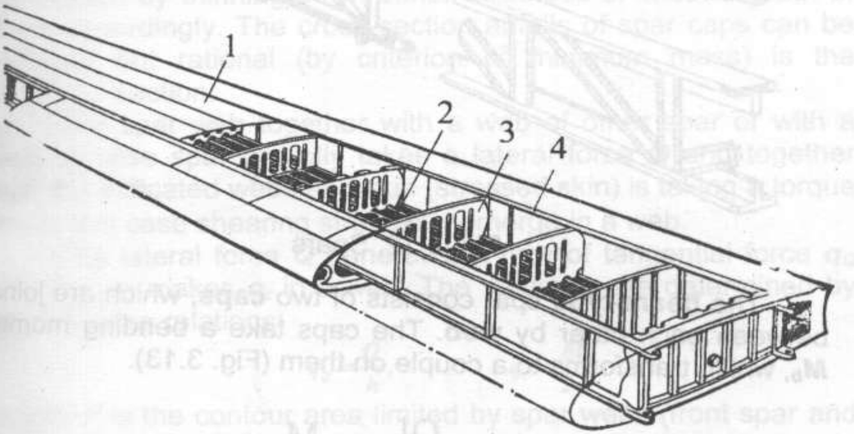

Fig. 3.11. Standard wing design

The **longitudinal framework** involves spars, false spars, stringers, whereas the **cross-sectional** one involves ribs, bulkheads. The stressed skin can be referred to both frameworks (Fig. 3.11).

The **spar** is a longitudinal beam (Fig. 3.11, item 4) taking bending moment $\boldsymbol{M_b}$ (completely or partially), lateral force ***Q*** (completely or partially) and torque $\boldsymbol{M_t}$ (partially) act on the wing.

Spars have a lot of design varieties (Fig. 3.12).

They can be a beam-type (Fig. 3.12, a). Here 1 – upper cap, 2 – lower cap, 3 – spar web, 4 – strut. They can be a truss (Fig. 3.12, b, c). They can have a closed airfoil or unclosed one. They can be one-web and multiweb, etc. Because spars take and transmit the bending moments, they for sure must be fastened not less than using two points in the root.

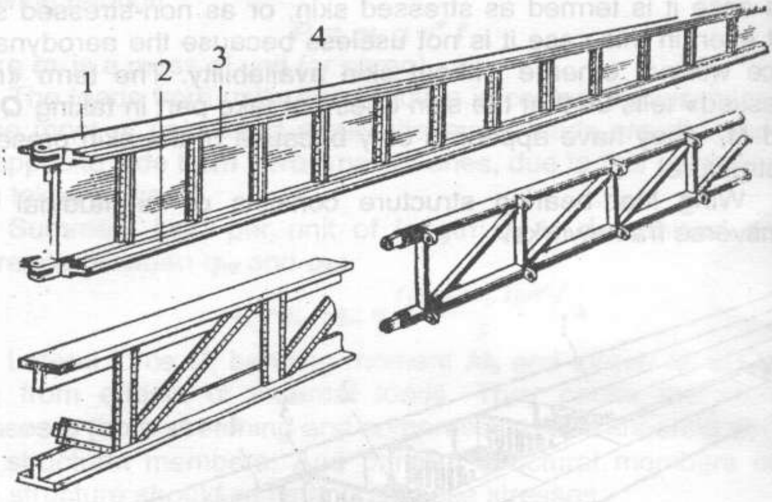

Fig. 3.12. Spars

The **beam-type** spar consists of two **caps**, which are joined between each other by **web**. The caps take a bending moment ***M_b***, which transforms to a couple on them (Fig. 3.13).

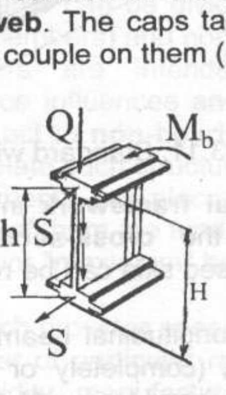

Fig. 3.13. Scheme of spar loading

In this case one of the caps is compressed (normal compression stresses **-σ** appear) and the other is stretched (normal tensile stresses **+σ**). Thus let's emphasize once again, a spar is fastened in two points on caps, otherwise it will not be able to perceive a bending moment.

The values of forces acting in spar caps can be found by the following relation:

$$P = \frac{M_b}{h}$$

where $h = 0.95\,H$, H is a spar height.

As we can see, the force acting in its caps is decreased with increase of a spar height, therefore mass is decreased too. Hence the more the value of airfoil thickness ratio is, the less mass (and on the contrary).

The bending moment of wing is spanwise decreased from the root to the tip. Cross section of spar caps should be decreased by thinning-down either thickness or width or both of them accordingly. The cross-section airfoils of spar caps can be different but rational (by criterion of minimum mass) is the double-T section.

The spar web together with a web of other spar or with a web of false spar partially takes a lateral force Q and together with the indicated webs and skin (stressed skin) is taking a torque M_t. In this case shearing stresses τ emerge in a web.

The lateral force Q generates a flow of tangential force q_Q and torque makes q_t in a web. The values q are determined by the following relations:

$$q_Q = \frac{Q}{h}, \qquad q_t = \frac{M_t}{2F},$$

where F is the contour area limited by spar webs (front spar and rear spar) and skin (top and bottom).

The struts are members from roll-formed shapes or pressed ones (see Fig. 3.12, a, item 4) are sometimes mounted on a spar web for strength improvement.

The spars are **monolithic** and **modular** according to design performing. The monolithic spar is expedient from the point of view of a mass decreasing but it has low survivability. Modular one is to the contrary. There are double-webs spars and if two webs are extended to edges of spar cap they can take a torque.

The **truss-type** spar has the same two caps but already joint between themselves by braces and struts. Loads on caps are the same as in beam-type. But there are no shearing stresses (as in a web) in braces but normal stresses tensile and compression stresses.

Thus the difference of load between beam-type and truss frameworks is as former has both normal stresses $\boldsymbol{\sigma}$ and sheering stresses $\boldsymbol{\tau}$ as later has direct stresses only.

The truss-type spars are expedient for using on small load intensities.

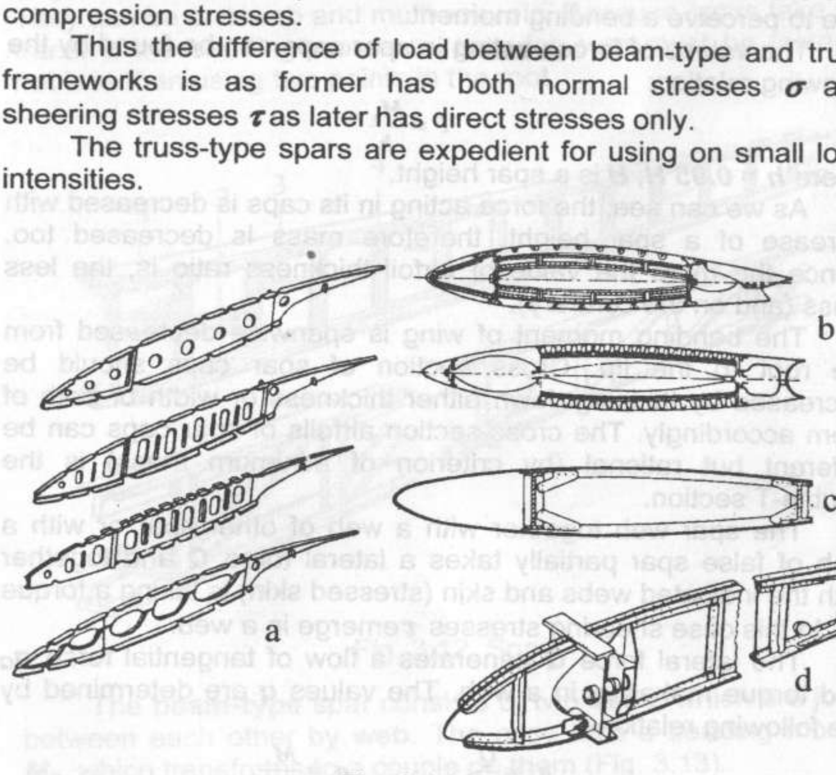

Fig. 3.14. Ribs

Ribs (see Fig. 3.2, item 3) are used for providing necessary airfoil. They take aerodynamic load from a skin and stringers and transmit it to spars (or false spar). The ribs integrate members of a longitudinal framework and skin in a unit.

It is a typical transverse member of a wing primary structure. Ribs produce and keep a section contour. They obstruct the approach of top and bottom panels during bending having compression at that moment. They redistribute loads between members of a longitudinal main structure. They take forces of intrinsic pressure in tank sections.

There are distinguished beam-type, truss and combined ribs according to load-bearing configuration.

The **beam-type** ribs are divided into usual, frame-type and two-standard (Fig. 3.14, here: a – usual beam-type ribs, b – frame-type ribs, c – two-standard rib).

Usual beam-type rib consists of caps and web (Fig. 3.15).

Here 1 is rib nose, 2 is mid-range, 3 is tailpiece, 4, 5 are rib caps, 6, 7 are cut-outs for stringers.

According to accepted loads ribs are divided into **normal** and **supporting (reinforced).** Supporting ribs (Fig. 3.14, d) except for mentioned above functions of normal ribs take concentrated forces from engine mounting points, landing gear struts, from mounting points of controls, etc.

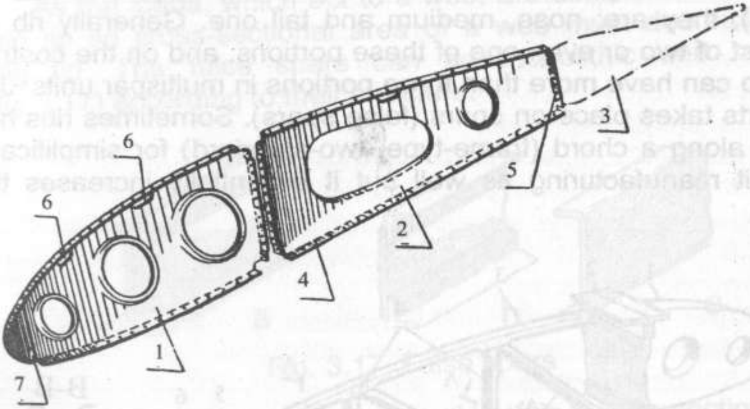

Fig. 3.15. Beam-type rib

A rib as well as the spar can be monolithic and modular according to design performing. It is necessary to emphasize that normal ribs, which are manufactured of a thin sheet, can be monolithic too.

The pitch of ribs in a wing ranges over a wide range from ***200*** up to ***500*** mm.

Normal beam-type ribs are made as solid webs of a sheet material with thickness of ***0.8*** mm and more (less thickness is not used according to technological and operational reasons). The caps of beams are produced by folding a web by rib contour (for normal ribs) or with the help of attaching metal airfoils of T-section or angle one to the web (for supporting ribs). It is possible to apply the monolithic structures for supporting ribs, which have heavy load. Often web thickness of a rib is accepted greater than calculated one based on technological and operational reasons. Therefore lightening holes should be made. The holes contours must be folded to increase crippling stress of a local loss of stability for a web mass decreasing. Stability of the web should be increased by angle struts or formed creasing (as well as spar webs).

Cut-outs are made for normal ribs in places of their interception with stringers and stringer is cut in places of stringer interception with supporting ribs.

Structurally rib consists of three portions (if unit has two spars), they are: nose, medium and tail one. Generally rib can consist of two or even one of these portions, and on the contrary, the rib can have more than three portions in multispar units. Joint of parts takes place on spars (false spars). Sometimes ribs have splits along a chord (frame-type, two-standard) for simplification of unit manufacturing as well but it essentially increases their mass.

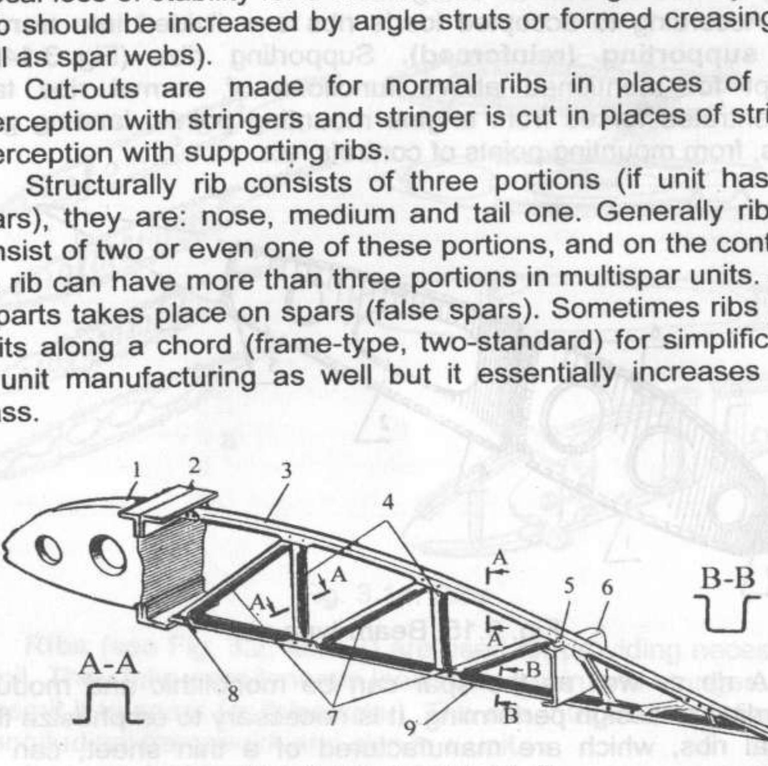

Fig. 3.16. Combined rib

Truss rib as well as truss spar consists of caps, struts and braces. All members of a truss rib operate with normal stresses (tensile and compression). The truss ribs are used during light load intensities.

Sometimes the combined-type ribs – truss-beam-type ones (Fig. 3.16) – are also used.

The false spar almost does not differ from a spar in design. The difference is that false spar has very weak caps. Besides it is attached in one point to a fuselage. Thus the working section of a false spar is its web but the caps of a false spar serve only for attaching a skin to it as well as unit hinge fittings of units, which can be fastened to it.

The false spar closes a wing contour in cross sections. False spar perceives a torque M_t (together with a spar web and a skin) and shear force Q (together with a spar web) in a monospar wing. The false spar does not operate on a bending moment.

The most rational structure of a false spar represents a thin solid web without lightening holes. A web is reinforced by struts for increasing critical stresses during loss of stability.

As the loads, which act to a web, are diminished towards a wing tip so cross-sectional area of a web must decrease to a wing tip. The false spars can be monolithic and modular (Fig. 3.17) according to their structure.

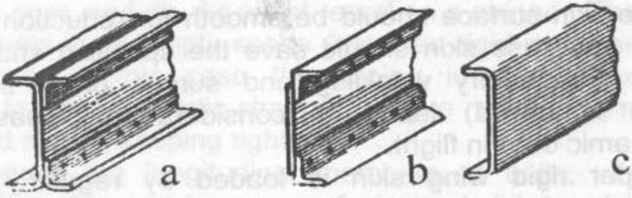

Fig. 3.17. False spars

The false spar can be arranged both in a nose section of the unit and in tail one. For example, in former case the slat and in the second one an aileron and lifting devices can be attached to it on a wing. Availability of a rear false spar is mandatory if the unit has one spar, as the tailpiece of airfoil is usually cut out for arrangement of ailerons and high-lift devices.

The **skin** ensures the established shape of a wing surface and makes it impermeable for air. It takes up a local air load, aerodynamic force emerges on it (pressure multiplied by the area).

Skin is one of basic members of a wing structure. It ensures strength and stiffness.

The type of a modern skin depends on a level of emerging surface loads. The mild skin perceives stretching only, having other kinds of loads for a part of a supporting skeleton. The soft skin gives a way to rigid, stressed skin with increasing speeds, loads and requirements to A\C. The stressed skin participates in perception of the force factors torque, bending moment and shear force. The types of loads perceived by a skin, depend on the load-bearing configurations of units, which we shall consider further. The stressed skin is fabricated from rigid materials such as plywood, metal sheets (duralumin, steel, titanium, beryllium alloys), composite materials.

The skin thickness can be from several tenth fractions of millimeter up to ten and more millimeters. The skin thickness has to be decreased in direction from root to wing tip direction together with reduction of the loads acting to it. The skin thickness can vary discretely while sheets of standard width are applicable. Skin thickness can vary continuously in case of chemical etching applying.

The skin surface should be smooth for reduction of friction drag. In any case skin should save the specified shape during loading. Anticipatory wrinkling and surges on a skin (even strength is saved) leads to considerable increase of an aerodynamic drag in flight.

Upper rigid wing skin is loaded by regularly repeated compression force and lower one by tensile force because of acting bending moment. In this connection the high-strength materials, which work in compression well are used for the top "compressed" skins (panels), whereas materials, which have high performances of fatigue life are used for the bottom stretched panels. For supersonic airplanes the material of a skin (panels) is selected taking into account the aerodynamic heating in flight. Skins manufactured of the heat-resistance materials are placed in parts of considerable heating.

For increasing structural survivability the width of skin panels is selected according to the destruction of one of the panels that is allowed without the loss of total wing strength. There is a tendency to reduce a number of joints in high resource structures of a wing to the maximum. The wing skin thickness is selected depending on acting load. In this case it is allowed that the skin perceives the tensile loads over the summery area of a skin and stringers and compression loads are perceived only by small sections of a skin together with stringers. There is a tendency to make thick skin with variable thickness as loads decrease towards a wing tip.

The mass of a wing skin constitutes about ***25...50%*** of wing total mass, therefore the mechanical or chemical contouring of sheets and panels in limits tolerated by strength is done to improve weight performance.

It is necessary to perform the joining of skins so that quality of exterior surface would be worsened minimally. For example the joint whenever is possible should be disposed in parallel to airflow but not across. There should not be steps. But if it fails to avoid it is necessary to dispose them streamwise instead of up-stream.

The skin panels are joined with each other either by butt joint or by lap one. It is necessary that joints of skin panels should be arranged on rigid members of a wing main frame: such as spar, false spar, and rib. As a last resort on a stringer. The joining of skin panels in an empty space (between rigid members) must be admitted. In this case the joining is loaded extremely adversely in terms of static strength, fatigue resistance, retaining the desired shape, keeping tightness.

Stringers are longitudinal members of units, which are bound with a skin and transverse framework (ribs and frames). They perceive the axial tensile and compression stresses (together with a skin). They also perceive local aerodynamic loads (together with a skin too). The cross-section airfoils of stringers can be the most diversified (Fig. 3.18).

Stringers are **bent** and **pressed** according to the way of manufacture. Bent stringers are lighter but they have lower stiffness too, pressed ones are to the contrary. Swells (bulbs) are often made at the tips of stringer airfoils for increasing buckling stresses of stability loss. Spacing on which stringers are placed depends on many factors and ranges within the limits of ***100 ... 400*** mm.

It should be noted that the availability of stringers on a wing is not mandatory. So-called stringerless structures are used as well. The fact is that the stringers are arranged crosswise of an air stream. They cause a waviness of a skin resulting in increasing an aerodynamic drag. In the case of the applying stringerless wings the ribs with lower pitch are placed on them. Pressed stringers are better from manufacturing point of view.

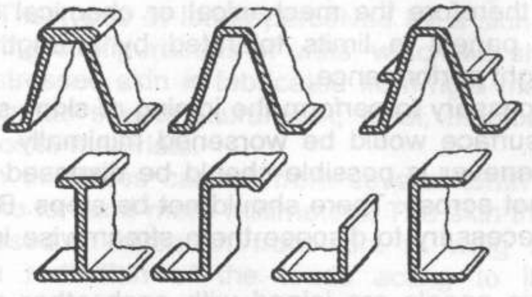

Fig. 3.18. Stringers

Panels. These are members of a main structure of an aircraft, which include a skin having previously finished special structure. Such structure differs from standard flat sheets. For example it has swell in attachment points of ribs or stringers to a skin. Either it is already attached to stringers are or the stringers already manufactured together with a skin (in this case stringer is called a stiffener). All these are done to reduce structure mass . Besides, aircraft assembly time aircraft is cut. The installation and joining of (finished) panels are carried out in a jig.

The overal dimensions are determined by structural and technological wing joints. Width of panels is matched judging from conditions of providing structure survivability in high resource airplanes.

Some following types of panels are distinguished according to design features.

Modular panels. They include skin panels with the edgings, stringers, ribs, etc. attached to them (Fig. 3.19, here 1 – skin, 2 – rib, 3 – stringer, 4 – top section of a spar). The main advantage of such panels as well as any other modular structures is high survivability. The main disadvantages are increased mass, waviness of a surface, which is blown by a stream.

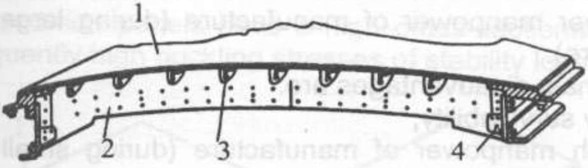

Fig. 3.19. Modular panel

Monolithic-modular panels. They involve the prefabricated finned parts of a skin with the ribs or stringers, which then are attached to local swells of the formers.

Monolithic panels. In this case the skin is manufactured together with framework parts. They are stringers, edgings (Fig. 3.20).

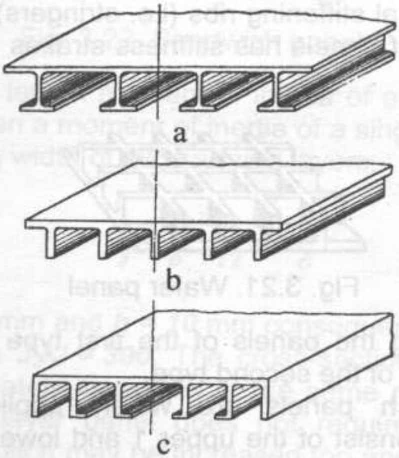

Fig. 3.20. Monolithic panels

We have the following advantages of monolithic panels in comparison with modular ones:

- low mass;
- high aerodynamic surface quality;
- less number of linking joints;

- high tightness;
- less number of stress raisers;
- increased effective area of cross section;
- lower manpower of manufacture (during large series of manufacture).

The main disadvantages are:

- low survivability;
- high manpower of manufacture (during small series of manufacture);
- complexity of repair.

The applying of monolithic panels reduces a mass due to the conformity of the sizes of sections to acting load and significant less quantity of links in comparison with a modular structure as well. The units to be manufactured of monolithic panels have increased torsional stiffness that is good from aeroelasticity performance point of view.

The monolithic panels can be of two types. The first type has only longitudinal stiffening ribs (i.e. stringers) (see Fig. 3.20). The second type of panels has stiffness strakes in two directions (Fig. 3.21).

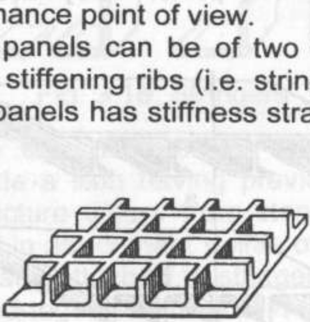

Fig. 3.21. Wafer panel

Manufacturing the panels of the first type panels is much simpler than those of the second type.

The **sandwich** panels are widely applied for modern airplanes. They consist of the upper 1 and lower 3 skins, bound between them by light filler 2 (Fig. 3.22, Here a – honeycomb filler, b – porous filler, c – corrugated filler).

Carrying layers are fabricated of metal sheets or of composite materials, the filler may be honeycomb, porous one or manufactured of a corrugated sheet.

The honeycomb filler material is fabricated of a metallic foil with ***0.02...0.03*** mm width or of composite materials.

Porous filler is fabricated of porous plastics such as foam plastic. Bonding or soldering are applied to connect carrying layers and filler.

The sandwich panels have a high cross-sectional stiffness and consequently high buckling stresses of stability loss.

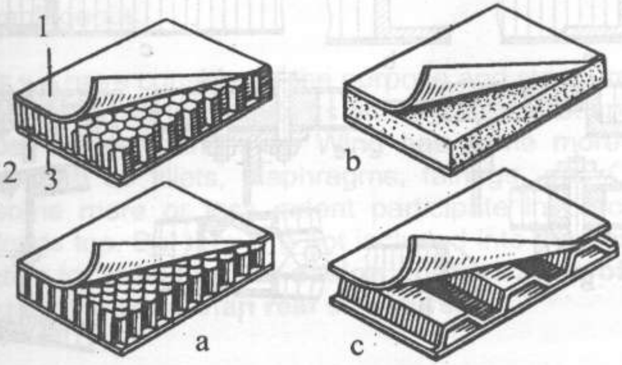

Fig. 3.22. Sandwich panels

The per unit length moment of inertia of a multi-layer panel is much higher than a moment of inertia of a single-layer skin with the width equaling width of two carrying layers:

$$\frac{J_3}{J} = \frac{\delta h^2/4}{\delta^3/12} = 3\left(\frac{h}{\delta}\right)^2.$$

So if $\delta/2 = 1$ mm and $h = 10$ mm consequently $J_3/J = 75$ and if $h = 20$ mm then $J_3/J = 300$. The cross-sectional stiffness of a panel is approximately increased in the same ratio too. For this reason the multi-layer panel does not require closely-spaced stringers. The rib pitch may be increased too and only strong ribs may be remained in some cases.

Therefore main advantages of sandwich panels in comparison with usual ones are as follows:

- lower weight (during low load intensities);
- high aerodynamic surface quality;
- high tightness;
- high performance of a thermal insulation;
- high performance of sound insulation;

- practical absence of stress raisers on a surface;
- very high survivability (especially in case of applyin composite material);
- high service life.

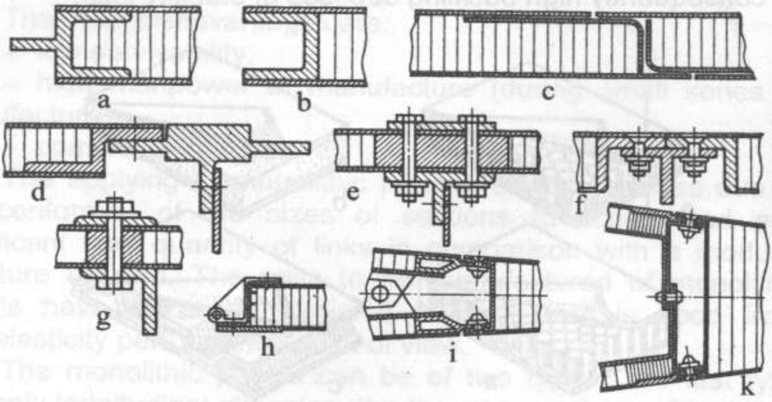

Fig. 3.23. Joints of sandwich panels

Following disadvantages should be considered:

- poor perception of concentrated efforts:
  - complexity of their linkage with parts of a framework
  - difficulties of production inspection.

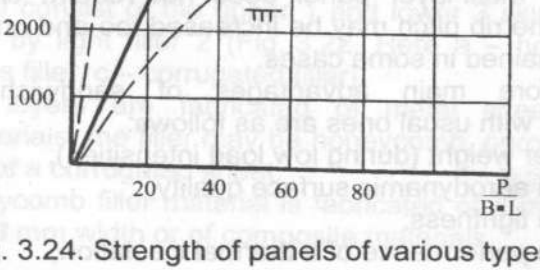

Fig. 3.24. Strength of panels of various types

That is why the linkage of sandwich panels to primary structural members spars, false spars, ribs (Fig. 3.23) causes the especial complexities.

The sandwich panels are advantageous in a weight ratio only if with low load intensities (Fig. 3.24).

Usual panels with the various type of stiffener stiffness are more advantageous.

Thus we have considered the purpose and structure of basic wing members, which constitute its primary structure: spars, false spars, ribs, stringers and skin. Wing has some more different members, such as fillets, diaphragms, fairings, etc. Of course they to some more or less extent participate in perception of external loads too. But they are not included into the design wing configuration for strength. **The design configuration of the unit should be less strong than real structure.**

Load-carrying structures of wings

First let us give the **definition**. The load-carrying structure is a combination and mutual placement of the unit members, which take up main load-carrying factors acting to a structure. It is determined by quantity, arrangement, level of participation of separate members in load-carrying operation. There are a lot of members which are usually not included in the load-carrying structures such as tips, noses, trailing-edges, fences, fillets, fairings, etc. in a structure of units except for load-carrying members that we have already considered.

The strength and stiffness of the unit of A/C can be provided by different load-carrying structures, which in general are subdivided into **truss-type** and **beam-type** (we already know difference).

Three of beam-type load-carrying structures are the most used. **Criterion of classification** and names of these configurations is the member (members), which takes up **bending moment M_b**. It is caused by that circumstance that bending moment M_b represents the most dangerous load (as compared with shear force Q and torque M_t), which requires the majority of a structural mass for perception.

If structure will be designed successfully from the view poin of bending moment perception, requirements of a minimum mas will be executed much easier.

Towards to units of load-carrying (for the aerodynami characteristics of an aircraft) structures such as wing, tail uni etc. the beam-type load-carrying structures are called as follows:

- spar;
- torsion-box;
- monoblock.

In units of bodies, fuselages, engine they are called a follows:

- spar-type;
- semimonocoque;
- monocoque.

In addition the semimonocoque has the following names stringer-skin or stringer-beam-type load-carrying structure.

According to criterion of classification it is possible to sa that bending moment is taken up by spar (spars) in unit with spar-type load-carrying structure, by a torsion-box in unit with th torsion-box load-carrying structure, by a monoblock wit monoblock-type one, by a monocoque with monocoque-type one. And it is already another story concerning box, monoblock, monocoque.

Hereinafter each load-carrying structure will be considere in more detail.

And now let's return to a wing, an unit of aircraft which we considered before.

As it was already noted there are three types of load-carrying structures of wings. These are spar-type, torsion-box-type, monoblock-type.

Spar-type wings

Main part of bending moment M_b is taken by a spar and only a minor part by skin (mainly by medium and tip zones of wing) and in stringers (panel) for a wing of the spar-type. But anywa finally the bending moment of a panel passes to a spar in a root section of a wing.

The spar-type load-carrying structures are expedient from mass point of view during low intensities of loads (larg constructive height of a wing airfoil). Main disadvantage is a low survivability because unit loses lift capability during destruction of a spar.

According to the number of spars the wings are single-spar, two-spar-type and multispar-type.

The spar 1 whenever possible is arranged in a place of maximum thickness of an airfoil (at the distance of ***0.3 ... 0.4*** length of a chord in the **single-spar** configuration (Fig. 3.25). As we know in this case the mass of a spar will be minimum one.

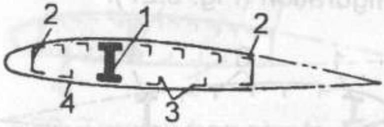

Fig. 3.25. Single-spar type

The arrangement of a rear false spar 2 for attaching an aileron and high-lift devices for single-spar-type configuration is obligatory. If there are high-lift devices on the edge, then the presence of the forward false spar is necessary too. The forward false spar is necessary in that case when the wing has a large chord too. Of course, wing has stringers 3, skin 4 and ribs too.

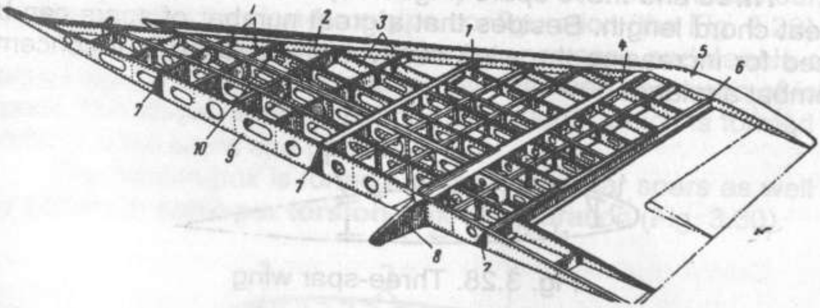

Fig. 3.26. Exterior efforts in a monospar wing

Now let's consider in detail by what exterior efforts such as Q, M_b and M_t are taken in a monospar wing with rear and front false spars (Fig. 3.26., here 1 – false spars; 2 –nose false spar; 3 – ribs; 4 – spar; 5 – skin; 6 – rear false spar; 7 – false spar attach fittings; 8 – spar attach fitting; 9 – root rib; 10 – strong rib).

Thus, the bending moment is taken by spar caps. The shear force is taken by spar webs and false spar. The torque is taken by a closed contour which is produced by spar webs and false spar web and by skin as well.

Let me remind you again that the spar is attached to load-bearing members of a fuselage in two points and false spar in one.

A front spar is arranged at the distance of ***0.12 ... 0.15*** of chord and rear one at the distance of ***0.5 ... 0.7...*** in **two-spar-type** configuration (Fig. 3.27).

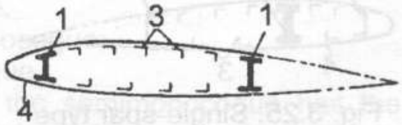

Fig. 3.27. Two-spar wing

The external forces in a two-spar wing are taken by the same way as in single-spar. The difference is that the bending moment M_b is taken by two spars.

The attachment of high-lift devices of trailing and leading edges of a wing is performed to these two spars.

Three and **more** spars (Fig. 3.28) are used for wings having great chord length. Besides that a great number of spars can be used for increasing the wing survivability. Especially it concerns combat airplanes.

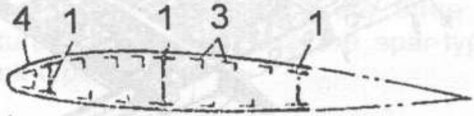

Fig. 3.28. Three-spar wing

Let me stress once again that spar of outer wing is attached to center-wing section or a frame of fuselage (body) not less than in two points heightwise (on caps). Wing spars should be joined with load-bearing members of a fuselage (spars, frames). Skin and the stringers can be broken in places of joining because they do not take bending moment in this place and do not transmit it further. Of course, to reduce aerodynamic drag the skins of units are joined in a place of joining by fillets, for example, but this is not taken into account in the load-carrying structure.

Torsion-box-type wings

The unit, where bending moment is taken by both spars (which are less massive in this case) and top and bottom panels (skin and stringers), is called **torsion-box-type**.

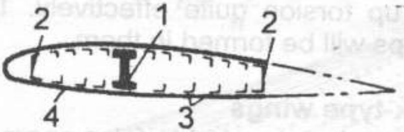

Fig. 3.29. Torsion-box single-spar wing

More often panels take up greater amount of the bending moment (approximately ***70%***). Skin is thicker and stringers are also stronger in this case. Unlike a spar-type wing a torsion-box-type one can be joined by all members, which take up bending moment. They are spars, skin, stringers, that is around the whole contour of a torsion-box, which is formed by spars (or spar and false spars) and panels.

There must be false spars, which form the closed contour, in the **single-spar torsion-box-type** configuration (the Fig. 3.29).

The bending moment is taken by spar caps and panels of a torsion-box. A shear force is taken by spar web and webs of false spars. The torque is taken by the closed loop, which is formed by webs of false spars and panels.

The torsion-box is formed by front and rear spars as well as by panels **in two-spar torsion-box** configuration (Fig. 3.30).

Fig. 3.30. Torsion-box two-spar wing

The loads are taken by the same way as in previous case.

Torsion-boxes which include three (Fig. 3.31) and more spars have high characteristics of survivability.

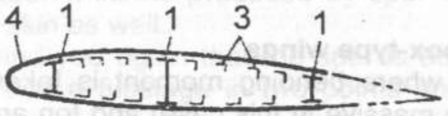

Fig. 3.31. Torsion-box three-spar wing

They take up torsion quite effectively. The reason is that some closed loops will be formed in them.

Monoblock-type wings

The spars are degenerated to false spars in this case. False spars take up only the shear force and the torque in the monoblock unit. The bending moment is completely taken by panels.

There may be two and more false spars (Fig. 3.32, 3.33).

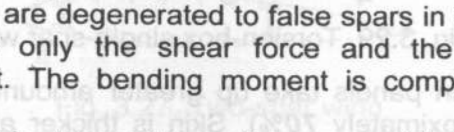

Fig. 3.32. Monoblock wing with two false spars

Fig. 3.33. Monoblock wing with three false spars

But there may be monoblock wings without false spars too (Fig. 3.34).

Fig. 3.34. Monoblock wing without false spars

The load-carrying panels of the monoblock unit can be arranged both in a zone between false spars and along all contour of the unit (Fig. 3.35).

But the second configuration is not rational from minimum mass requirements point of view as the material in nose and tail parts of such unit does not take up the bending moment. The reason is that "building height" (i.e. arm ***h***) is very small. As a result we obtain great force in load-bearing members.

$$P=\frac{M_b}{h}.$$

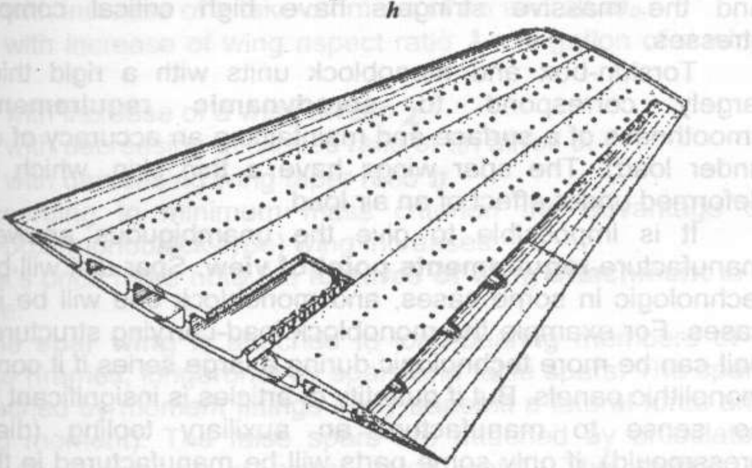

Fig. 3.35. Monoblock wing design

And consequently it does not make sense to arrange a material in such amount in these zones (thick skin, massive stringers) because of increasing the mass of the unit. Such structure can have justified using only for high-speed airplanes, aiming to provide the necessary stiffness of the unit.

The monoblock unit is attached to panels and false spars. The monoblock and torsion-box-type load-carrying structures are expedient in weight ratio during great intensities of loads. Spar load-carrying structures are expedient during small intensities.

The **monoblock** structures should not be confused with **monolithic** ones. The second term characterizes the way of manufacture, whereas the first one is the way of loads taking.

Though the panels of monoblock structures are often fabricated as monolithic ones but it is not mandatory.

And now we shall do a **comparative estimation** of units of various load-carrying structures according to several criteria.

The efficiency according to criterion of a **minimum mass** depends on load intensity, that is largely determined by an airfoil height. Usage of spar units is rational during low intensity (great height) and torsion-box and monoblock load-carrying structures are expedient during high intensity (thin airfoil) where a thick skin and the massive stringers have high critical compression stresses.

Torsion-box and monoblock units with a rigid thick skin largely correspond to **aerodynamic requirements** (a smoothness of a surface and maintaining an accuracy of outlines under load). The spar wings have a thin skin, which can be deformed under effect of an air load.

It is impossible to give the unambiguous answer from manufacture **requirements point of view**. Spar unit will be more technologic in some cases, and monoblock one will be in other cases. For example the monoblock load-carrying structure of the unit can be more technologic during a large series if it consists of monolithic panels. But if quantity of articles is insignificant there is no sense to manufacture an auxiliary tooling (dies and pressmould), if only some parts will be manufactured in them. In this case a spar wing will be more expedient. Its members can be manufactured of standard semi-finished products (sheets, sections, rolled products).

If we consider **requirements for layout and convenience of operation**, the spar unit is the best: a simplicity of assembly/disassembly, possibility to do the sufficient quantity of cut-outs for the viewing and maintenance, the attachment of hatches and access doors of such cut-outs is not load-carrying (as in monoblock structures) and is performed rather simply.

The monoblock-type load-carrying structure more corresponds to **survivability requirements**. A great number of members take up the loads in it. The members are fixed in many points and the damage of some their quantity can not still result in total loss of lifting properties. The unit loses the capacity to take up loads in case of destructing one of two spars (the more especially in the single-spar configuration).

The monoblock load-carrying structure corresponds to **aeroelasticity requirements** better too, because the thick rigid skin operates for torsional stresses more efficiently. It results in increasing critical flutter speeds, divergence and a reverse.

It is possible to give the recommendations for applying the different load-carrying structures of a wing, resulting from in-service experience:

- with increase of a take-off mass of an aircraft m_0,
- with increase of wing aspect ratio λ elongation of a wing λ,
- with increase of a wing sweep χ,
- with decreasing thickness ratio of an airfoil c,
- with decreasing wing taper ratio η

according to minimum mass criterion the advantage of torsion-box (monoblock-type) wing increases.

Let's once more note the **features of wing attachment** to a fuselage.

The **spar wing** is attached to load-bearing members of a fuselage (frames, longerons) by spars and false spars. The spars are attached by moment fittings (they transmit a lateral force and bending moment). The false spars are attached by articulated fittings (they transmit a shear force only). The torque is transmitted by attachment fittings of both spar and a false spar.

The **torsion-box-type wing** is attached to a fuselage by spars (moment fittings), false spars (articulated joints) and panels (contour fittings).

That is why the unit to which a torsion-box-type structure is joined should have the torsion-box-type load-carrying structure in a place of joining too. For example, if outer wing is a torsion-box, then the center-wing section of a fuselage, to which it is attached should have a torsion-box too.

If a **monoblock wing** is attached to a fuselage (by contour fittings), then the center-wing section of a fuselage should be monoblock structure too.

The indicated requirement from accordance of the load-carrying structures of outer wings and a center-wing section is an indispensable condition of obtaining a minimum structural weight.

Of course, in a monoblock load-carrying structure of a wing it is possible to apply the spar center-wing section as well, if it is caused by conditions of arrangement. Only in this case it is necessary to provide members, which will redistribute a load of a monoblock to spars. It will result in increasing structural mass.

Design features of swept wings

Before considering a swept wing structure, let us recall the **reason of applying** such wings.

A swept wing found its application when aviation approached "a sound barrier", which was already mentioned. Such a wing shape (equally with other ways) enabled aviation to overcome this obstacle. Swept wings are widely used on the aircraft with high subsonic and low supersonic speeds.

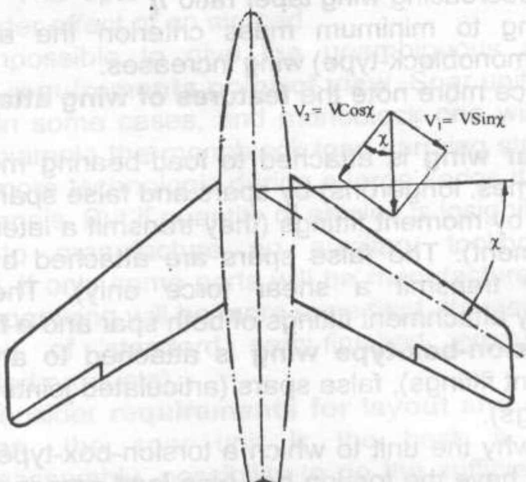

Fig. 3.36. Velocity vectors

Sweep influences the drag value very much.

Velocity vector of an airflow ***V***, running against a swept wing, may be broken into two components (Fig. 3.36): by the line of focuses V_1 and perpendicularly to it V_2. Velocity V_1 is called longitudinal and V_2 is called the effective one. Both velocity components must be less than initial vector **V**.

An airflow at the speed $V_1 - V \sin x$ flows along the wing and is not connected with the change of aerodynamic forces. It results from the wing surface being almost flat in such direction. Therefore the airflow is not expanded and is not compressed (there will be only the boundary layer thickness rise and friction force increase).

The component of the velocity $V_2 = V \cos x$ refers to airflow, which flows about the wing by airfoil. Therefore its value changes and can reach sonic speed at last. But with a sweep angle increased the component of the velocity V_2 becomes less. Therefore local sonic speed will come later, hence, the Mach number (**M**) will be great (Fig. 3.37.).

Critical Mach number for a swept wing is determined according to a formula:

$$M^* = M_1^* \frac{2}{1+\cos\chi}$$

where M_1^* – critical Mach number for a rectangular wing.

On a swept wing a shock stall comes not only later, but passes rather weaker, therefore its shock stall will be rather less (Fig. 3.38.).

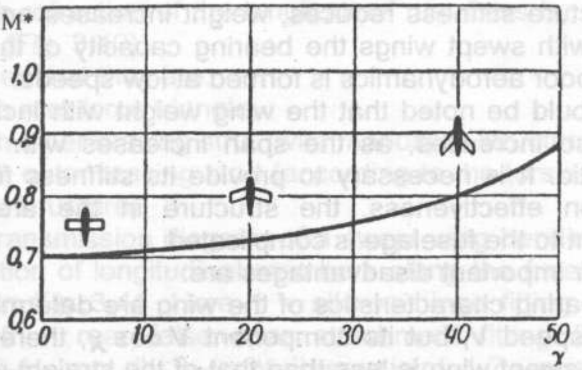

Fig. 3.37. Relations of critical speed to a sweep angle

While changing a sweep angle χ the component V_2 may be made as little as possible, decreasing the same speed of an airflow chordwise. With this local Mach number may be made less than a critical Mach number. Thus theoretically a subsonic airflow about the wing chordwise may be provided at any supersonic speed.

But it is true only theoretically. Reality makes a certain corrective. Increasing a sweep angle results in fast increasing (according to a tangent law) the outer wing length with simultaneous decreasing the chord dimension.

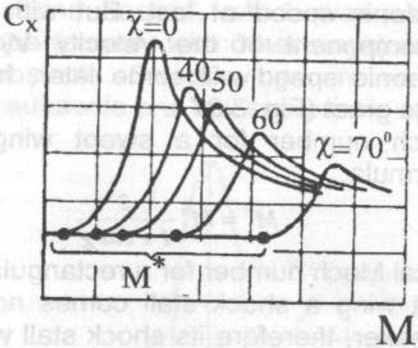

Fig. 3.38. Relations of a drag coefficient to M

Structure stiffness reduces, weight increases and so on. In addition, with swept wings the bearing capacity of the wing tips reduces, poor aerodynamics is formed at low speeds.

It should be noted that the wing weight with increasing the sweep also increases, as the span increases with unchanged aspect ratio. It is necessary to provide its stiffness for retaining the aileron effectiveness, the structure in the area of wing attachment to the fuselage is complicated.

Other important disadvantages are:

- bearing characteristics of the wing are determined not by the flight speed ***V***, but its component ***V cos χ***, therefore the lift force of a swept wing is less than that of the straight wing (under other equal conditions);
- coefficient C_L is also less;

– effectiveness of high-lift devices is rather reduced (ref. below) and hence, take-off and landing performance is deteriorated;

– the stall on such wings begins on the tips earlier than the airplane itself reaches critical angle of attack.

It is assisted by the longitudinal component of the velocity ***V_1***, resulting in increasing thickness of the boundary layer on the wing tips. Tip stalls deteriorate the stability and controllability of A/C at increased angles of attack, reduce the aileron effectiveness.

Structural features of swept wings

The swept wings consist of the same primary structure members as the straight ones. They have the same structural and load-carrying configurations – spar, torsion-box and monoblock.

The features of the swept wings become apparent only in loading and structure of their root portions. The wings are attached to the fuselage by these portions.

Depending on the load-bearing structure of the root portion the swept wings are divided into:

– with refraction of the longitudinal members near a fuselage board (Fig. 3.39);

– with refraction of the longitudinal members by a fuselage center line (Fig. 3.40).

Besides that they are:

– with root force triangle;

– with inner bracing strut (with monospar structure);

– with outer bracing strut (according to the torsion-box, with torsion-box structure).

The transmission diagram of a swept wing bending moment with refraction of longitudinal members along the fuselage board is shown in Fig. 3.41. Here 1 – aileron hinge fitting 1-5 to the fuselage, 2 – rear false spar attachment fitting 2-6 to the fuselage, 2-4 – root rib, 3 – root rib-spar joint, 1-7 – nose rib.

In a straight wing the bending moments of port and starboard wings is balanced in a fuselage section.

(We would like to remind you that a moment vector is directed perpendicularly to the plane in which it acts).

In a swept wing a bending moment in a spar attachment fitting ***M*** gives two components:

$$M_{1-1} = M \cos \chi , \qquad M_{1-2} = M \sin \chi .$$

Moment M_{1-1} will be balanced in a fuselage section with a port wing moment. Moment M_{1-2} will be transmitted to **inboard rib** 1-2. In this case the couple of forces occurs in it in points 1 and 2. The greater a sweep angle χ, the greater bending moment passes to the inboard rib. Therefore the inboard rib 1-2 will be main. Besides, cutouts will not be made in it.

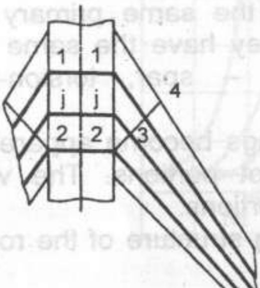

Fig. 3.39. Refractions of longitudinal units on a fuselage side

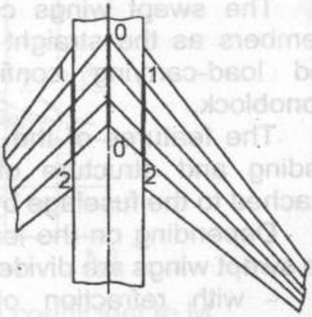

Fig. 3.40. Refractions of longitudinal units on a fuselage axis

The torque on a straight wing is transmitted to a fuselage through the inboard rib. On a swept wing the torque is transmitted to the ribs 2-4 and 1-7. **A root rib** 2-4 transmits the torque to the support (on the fuselage) and to the support 3 (on the spar) as the couple. The force, which occurred on the spar in the point 3, will load it additionally because of bending.

Thus on a swept wing the bending moment partially becomes torque and a wing torque loads the spar by bending additionally. All that results in gaining mass of a swept wing compared with a straight wing.

Let's note once more that a swept wing of such configuration must have inboard and root ribs.

A root force triangle consists of the spar portion 1-3, inboard rib 1-2 and root rib portion 2-3.

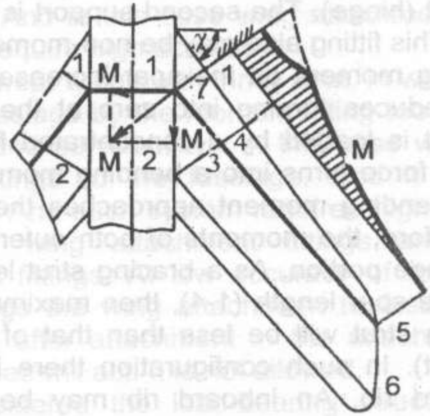

Fig. 3.41. Bending moment of a swept wing

The considered swept wing configuration has disadvantage. An inboard rib must not be cut (because of a great load acting on it). In this case a landing gear strut retraction is hampered.

There is no such disadvantage in a swept wing with inner bracing strut (Fig. 3.42).

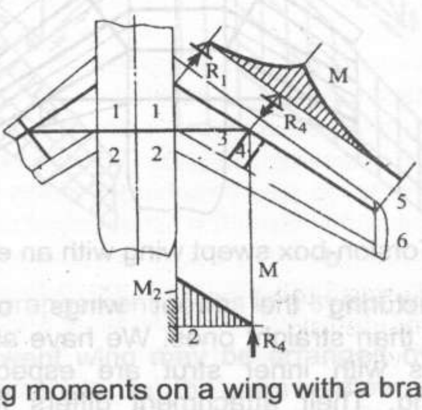

Fig. 3.42. Bending moments on a wing with a bracing strut

In this case the spar is a double-support beam. The first support is a spar attachment fitting to the fuselage 1. In contradiction to usual spar fittings (moment), in this case it can be non-moment (hinge). The second support is on the inner bracing strut (2-4). This fitting also may be non-moment (hinge).

Bending moment on the spar increases up to the fitting 4. Further it reduces turning into zero at the fitting 1. The inner bracing strut is loaded by a concentrated force at the fitting 4. Further this force turns into a bending moment on inner bracing strut. The bending moment approaches the fuselage at a right angle, therefore, the moments of both outer wings are balanced in the fuselage portion. As a bracing strut length to the board is less than the spar length (1-4), then maximum bending moment of a bracing strut will be less than that of the spar (without a bracing strut). In such configuration there is no necessity in a main inboard rib. An inboard rib may be cut, that simplifies landing gear strut retraction.

The configuration of the torsion-box swept wing with outer (with respect to the torsion-box) bracing strut is shown in Fig. 3.43.

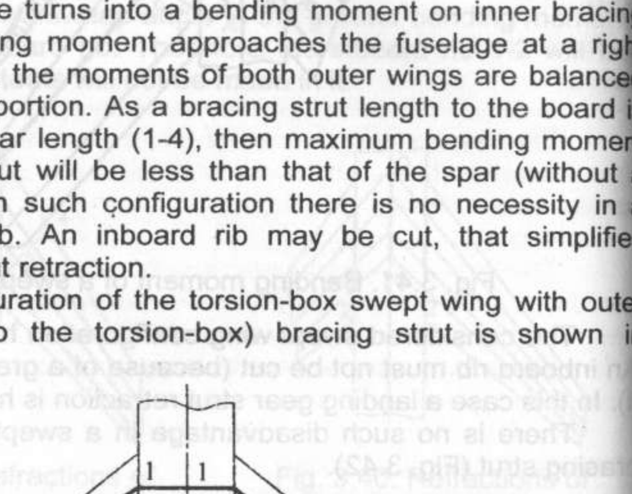

Fig. 3.43. Torsion-box swept wing with an external bracing strut

Manufacturing the swept wings, of course, is more complicated than straight ones. We have already noted. But the swept wings with inner strut are especially complicated in manufacturing. Their attachment differs from mentioned. We have considered the case when the strut is attached to the fuselage (frame) by the moment attachment fitting and the spar is attached to the fuselage (frame) by hinge one. In this case we have three attachment points to the fuselage. It is statically determined system. And in this case wing attachment fittings to the fuselage do not require high accuracy.

But there are swept wings with inner strut, in which the spar is attached to the fuselage by the moment fitting too (to increase structural reliability and survivability). In this case we have four wing attachment fittings to the fuselage. And it is statically undermined system. And such system requires high accuracy of manufacturing both wing attachment fittings and those of fuselage attachment fittings. At low accuracy of manufacturing the attachment fittings the wing attachment to fuselage will be either impossible or after attachment in the attachment fittings high mounting stresses will act. It is not allowed.

We have considered the load-bearing structures of the swept wings from the classification point of view according to the criterion of taking the bending moment. But main members in the wing may be arranged in different ways (with respect to the airflow, fuselage center line and so on).

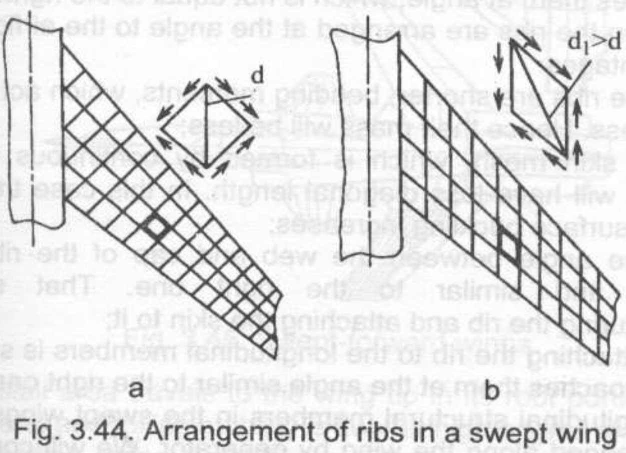

Fig. 3.44. Arrangement of ribs in a swept wing

The ribs in a swept wing may be arranged by the airflow (Fig. 3.44, a), at the angle to the ram airflow (Fig. 3.44, b) perpendicularly to one of the spars, the aerodynamic center axis, the wing medium line.

But the most rational arrangement at the angle to the airflow is a perpendicular arrangement to the wing stiffness axis. In such case the load from the torque will be in a rib plane. And such members as webs take forces in their plane properly.

When the ribs are arranged airflowwise, then there are advantages:

- desired airfoil may be kept more exactly;
- less drag may be obtained. In this case the skin waviness, which is caused by the presence of ribs, will be arranged in parallel to the airflow.

Disadvantages of a rib attachment airflowwise (by airflow):

- the ribs are longer, in this case the bending moment will be greater and, hence, its mass is greater;
- less critical stresses of surface buckling on the mesh, which is restricted by continuous ribs and stringers;
- angle between the rib web and rib cap (bevel) by its length will be variable. Hence, manufacturing the ribs and attaching the skin to them are hampered;
- attaching the rib to the longitudinal primary members (spars, false spars, stringers) is hampered, because it approaches them at angle, which is not equal to the right one.

When the ribs are arranged at the angle to the airflow, there are advantages:

- the ribs are shorter, bending moments, which act on them , will be less. Hence their mass will be less;
- a skin mesh, which is formed by continuous ribs and stringers, will have less diagonal length. In this case the critical stress of surface buckling increases;
- the angle between the web and cap of the rib will be constant and similar to the right one. That simplifies manufacturing the rib and attaching the skin to it;
- attaching the rib to the longitudinal members is simplified, as it approaches them at the angle similar to the right one.

Longitudinal structural members in the swept wings is most often arranged along the wing by generator. We will consider all the advantages and disadvantages of such arrangement (in comparison with arrangement of longitudinal structural members perpendicularly to the fuselage center line) on the example of delta wings.

Let's consider once again technological aspects of arranging the ribs along the airflow and perpendicularly to stiffness axis.

Thus, manufacturing the ribs, which are arranged along the airflow, is complicated, because of a varying bevel (angle between the cap and web of the rib). For manufacturing such rib it is necessary to manufacture the matrix and punch of very complicated shape.

Swept-forward wings

Such wings (Fig. 3.45) have some advantages as compared to the sweptback wings:

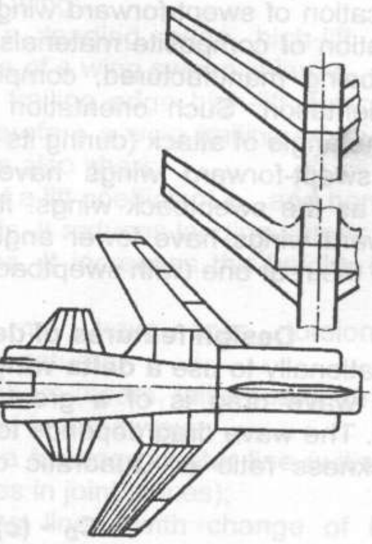

Fig. 3.45. Swept-forward wings

- stall area travels to the wing tip in its root portion. In this case lateral and rolling stability is kept at high angles of attack;
- higher maneuverability performance at high angles of attack;
- less probability for spinning;

– it is simpler to provide different configuration approaches, because a wing center section is far behind the airplane center of mass;

– it is simpler to observe the "area rule".

The main disadvantage, which restrained the application of swept-forward wings, is low values of a critical speed of divergence V_{div}. When such a wing bends, the airfoil twists increasing the angle of attack.(Let's consider in detail).

In this case the lift force increases, further bending and twisting take place. It may take place till a wing failure when the speed is higher than V_{div}. At such speed the elastic forces of a structure are unable to balance aerodynamic forces which bend and twist the wing.

Application of swept-forward wings became possible due to the application of composite materials into their structure. While the wing being manufactured, composite material fibers have special orientation. Such orientation causes wing twisting for reducing the angle of attack (during its bending).

The swept-forward wings have the same load-carrying structures as the sweptback wings. It should be noted that the swept-forward wings have lower angle χ along a leading edge than along the rear one (with sweptback wings vice versa).

Design features of delta wings.

It is rationally to use a **delta wing** at supersonic speeds. As we know, wave drag is of a great importance in such flight conditions. The wave drag depends to considerable extent on an airfoil thickness ratio c. Quadratic dependence at supersonic speed is

$$C_D \sim (c)^2.$$

A delta wing has considerably greater chords b as compared with a sweptback one. Therefore at the same values of absolute maximum thickness of the airfoil c_{max}, a thickness ratio equal $c = c_{max}/b$, will be rather less. Hence, drag will be reduced too. It is the first advantage of a delta wing as compared with a sweptback one.

The second advantage is the presence of large inner volumes in a wing root. These volumes may be used for fuel storage , units, landing gear struts.

Thirdly, a delta wing has both great torsion and bending stiffness. In this case, their aeroelasticity characteristics become high.

Fourthly, the ailerons and high-lift devices of a wing trailing edge are arranged perpendicularly to the airflow. It results in their effectiveness.

Fifthly, the presence of large chords enables the multispar load-carrying structures to be used. In this case a wing survivability is increased.

Sixthly, a critical angle of attack is of great importance (because the angle of sweep is large). It reduces the probability of entering the spin.

Equally with stated advantages there are some disadvantages of the delta wing:

- effectiveness of a leading edge high-lift devices is reduced because the angle of a wing sweep is large;
- short span of the trailing edge high-lift devices. A delta wing span is not long. Therefore a wing trailing edge portion, not occupied with an aileron, is also short;
- not a great value of a lift coefficient c_L, and hence;
- high landing speeds. It reduces landing safety;
- high landing angles. It increases the height, hence, and landing gear weight.

Delta wings also may have spar, torsion-box, and monoblock load-carrying structures.

The longitudinal members (spars, false spars, stringers) in a delta wing may be arranged in three ways:

- perpendicularly to a fuselage center line (without change of longitudinal member axes in joint places);
- by wing generating lines (with change of longitudinal member axes in joint places). Such arrangement is also called converging longitudinal structural members;
- combined arrangement – part of the members is arranged by generating lines, part – perpendicularly to a fuselage center line.

The arrangement perpendicularly to a fuselage center line (Fig. 3.45) has main advantage – lower mass of longitudinal members.

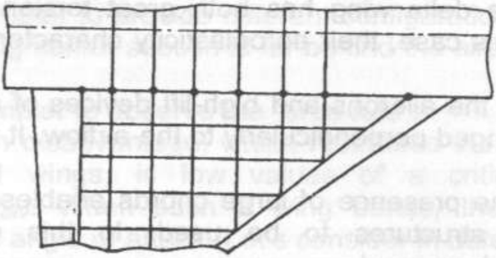

Fig. 3.45. Arrangement of longitudinal members in a delta wing (version 1)

It results from the longitudinal members being shorter here. It means that the arms, on which bending moment occurs, are shorter. Therefore the moment itself will be less. And, hence, a longitudinal member mass is lower.

Besides, transmission of a bending moment to the fuselage wing portion (wing-center section) will occur directly. In this case a supporting inboard rib is not required (ref. sweptback wings).

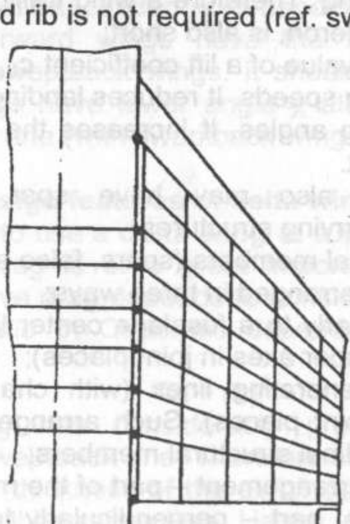

Fig. 3.46. Arrangement of longitudinal members in a delta wing (version 2)

Further, the attaching fitting structure of an outer wing to a wing-center section is simple.

The main disadvantage of such arrangement of longitudinal members is in the field of manufacturing methods. The angle between spar caps and a longitudinal member web (a bevel) is variable. It considerably complicates manufacturing such members.

In case of applying converging longitudinal members (Fig. 3.46) the bevel will be constant. It simplifies manufacturing. But, as it is known, with such arrangement a supporting inboard rib is required. It increases the structure weight. Besides, longitudinal members are longer in this case. Hence, their mass is higher.

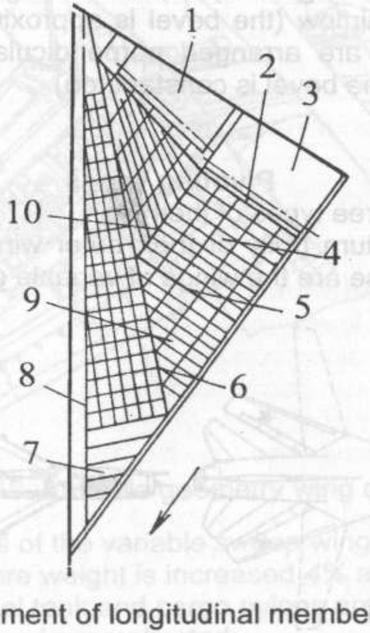

Fig. 3.47. Arrangement of longitudinal members in a delta wing (version 3)

The main disadvantage of monoblock delta wings is that the wing center section occupies a considerable fuselage portion. Therefore such wings should be arranged in upper (high-wing monoplane) or in lower (low-wing monoplane) fuselage portions.

To reduce the disadvantages of two stated kinds of arrangement a combined arrangement of longitudinal members is applied (Fig. 3.47). Here 1 – aileron, 2 – rear false spar of wing, 3 – flap, 4 – rear integral tank, 5 – bracing strut, 6 – front spar, 7 – front tank, 8 – front false spar of wing , 9 – landing gear compartment, 10 – supporting rib in the place of a longitudinal member change.

In this case longitudinal members are arranged in root portions perpendicularly to a fuselage center line. The bevel in root fuselage portions is approximately constant. But in tip portions, where the bevel considerably changes, the longitudinal members are arranged along wing generating lines.

The same may be said about the arrangement of ribs in delta wings. (ref. Fig. 3.47). In root wing portions they are arranged by an airflow (the bevel is approximately constant). In tip portions they are arranged perpendicularly to a front spar (leading edge), (the bevel is constant too).

Pivoting wings

There are three types of them:

– they can turn (fully or their outer wings) relatively to the vertical axis. These are the wings of variable geometry in flight;

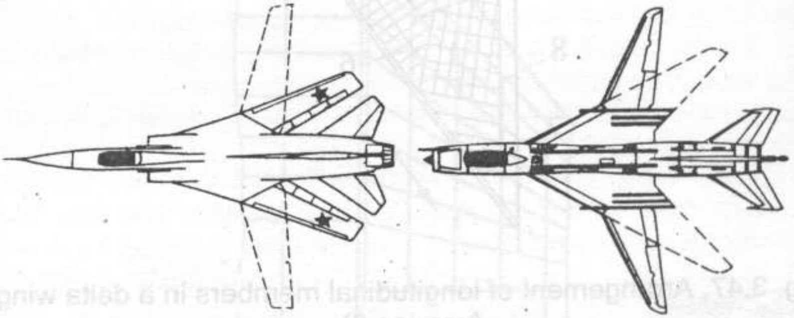

Fig. 3.48. Variable-geometry wings

– they can turn relatively to lateral axis. These are variable-incidence (angle of setting) wings in flight;

– they can turn (tip portions) relatively to a longitudinal axis.

Advantages of variable geometry wings in flight (Fig. 3.48) are:

- take-off and landing performance is high. It results from considerable value of c_{Lmax} at low values of sweep.
- fuel consumption is reduced at subsonic speeds, because of increasing maximum high aerodynamic efficiency K_{max}.
- maneuverability is increased (radius of turn is decreased). It results from increasing wing bearing capacity;
- load factors are reduced during turbulence (in flight with maximum sweep). It results from reducing the derivative of lift coefficient by an angle of attack c^{α}_{L}.

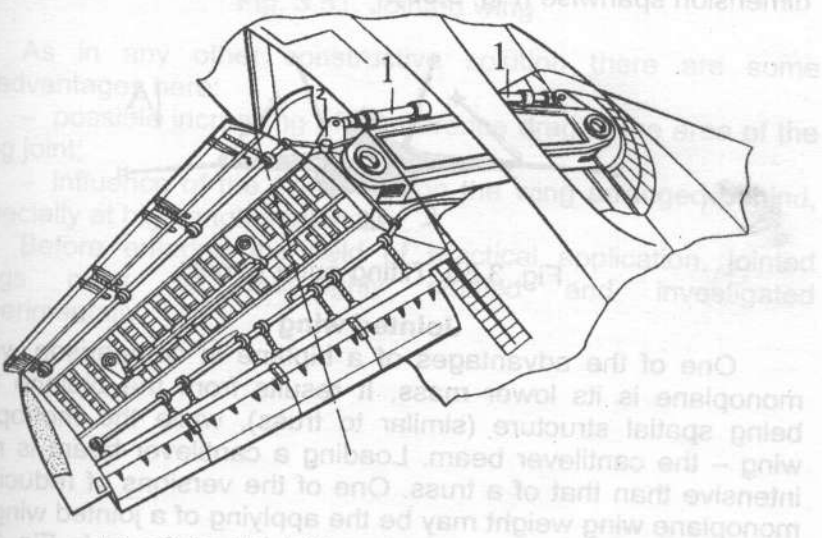

Fig. 3.49. Variable geometry wing design

Disadvantages of the variable sweep wings:

- wing structure weight is increased *4%* average;
- swiveling fuel tank and cargo pylons are necessary;
- wing structure is complicated;
- routing the communication arranged in the wing to a fuselage portion is complicated;
- wing bending-torsional stiffness is low;
- wing reliability, survivability and service life are reduced.

Proceeding from the above, the using of such a wing type must be sufficiently substantiated.

An example of a **variable sweep wing structure in flight** is given in the Fig. 3.49 (here 1 – power cylinder of a tilting system, 2 – tilting portion lever).

The **tilting wings of the second** type are applied to the airplanes-"convertiplanes". They may be applied and to the airplanes with direct lift control. But application of such wings is limited now.

The wings with turning the outer wing panels are mainly applied to the airplanes of deck aviation to reduce overall dimension spanwise (Fig. 3.50).

Fig. 3.50. Tilting outer panels

Jointed wing

One of the advantages of a biplane in comparison with a monoplane is its lower mass. It results from the biplane wing being spatial structure (similar to truss), while the monoplane wing – the cantilever beam. Loading a cantilever beam is more intensive than that of a truss. One of the versions of reducing a monoplane wing weight may be the applying of a jointed wing. To be more accurate, then the wings which are shown in Fig. 3.51. Here 1 – front wing, 2 – rear wing, 3 – fairing.

Such configuration of the wing arrangement enables the wing weight to be reduced. In view of the feature of wing interlocation there may be:

– increasing the lift-drag ratio due to reducing the wave and induced drag. And this reducing is possible because of applying the thinner airfoils increasing the aspect ratio;

– increasing flight speed due to possibility of applying the thinner airfoils;

– increasing the flexural-torsional stiffness of the two-wing system. In this case the aeroelasticity characteristics are improved.

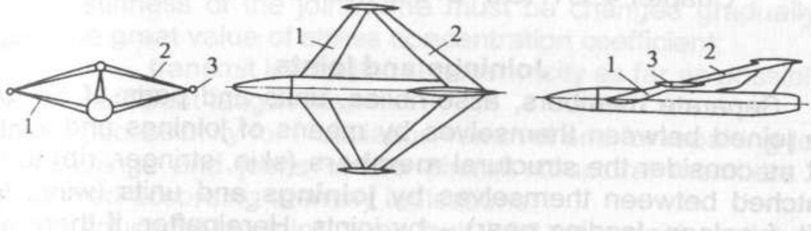

Fig. 3.51. Jointed wing

As in any other constructive solution there are some disadvantages here:

– possible increasing of interference drag in the area of the wing joint;

– influence of the front wing on the wing arranged behind, especially at high angles of attack.

Before entering the field of practical application, jointed wings must be thoroughly studied and investigated experimentally.

Chapter 4. STRUCTURAL MEMBERS JOINING

Joinings and joints

Separate members, assemblies, units and parts of an A/C are joined between themselves by means of joinings and joints. Let us consider the structural **members** (skin, stringer, rib) to be matched between themselves by **joinings** and units (wing, tail unit, fuselage, landing gear) – by joints. Hereinafter, if there are no special instructions, the general term-joint will be used for both types.

The necessity of the joints is dictated by some circumstances:

– most parts and units of the A/C have different principles of operation and arrangement, the members are manufactured of different materials according to the operation conditions;

– while installing the members and units during the process of manufacturing and assembling the A/C, the access doors and breaks necessary (for meeting maintainability requirements);

– for providing the accesses to the units and separate members in the process of operation the access doors and breaks are necessary (for meeting the operation requirements);

– in a number of cases the reasonable dividing of the structure into parts simplifies manufacturing, improves maintainability, reduces production cost and contributes to the aircraft repairability.

The question about dividing the structure into parts (or on the contrary – about the enlarging) is solved on the basis of a detailed analysis for a specific type of manufacturing. One should mind, that such main joint members as rivets, bolts, screws, washers, nuts in overwhelming majority are standardized. In this case the manufacturing is considerably simplified (but the aircraft weight is increased).

Basic requirements are made on the joints

- joining (attaching) members must reduce the joined members strength at least of all;
- joint zone must be as equistrong as possible to the regular zones of the joint members;
- stiffness of the joint zone must be changed gradually to avoid the great value of stress concentration coefficient;
- transmit load without eccentricity as far as possible;
- sufficient fatigue life;
- accessibility for installation-removal and for repairing too.

Joinings and joints of the aircraft structural members are **classified** according to many indications:

- structural-lap joint, strap butt joint on a rigid section and so on;
- temporary (fasteners type) – bolted, riveted, welded, bonded and so on;
- purpose-butt, supporting, reinforcing;

According to the arrangement of attaching members:

- spot (approximately ***95 %***);
- continuous (approximately ***4.5%***);
- combined (***~ 0.5 %***).

According to the **loading** of attaching members:

- tensile load;
- shear load;
- combined load.

Classification according to the indication of **mobility** and **detachability** takes an important place:

- **fixed permanent** – while operating the members do not shift relative to each other. They cannot be disassembled without breaking the structural members themselves or stiffness (for example, stringer-to-skin joint). These joints are made by means of riveting, soldering, welding, bonding, flaring, pressing;
- **fixed detachable** joints can be disassembled without breaking the attaching members or fasteners but while operating they include relative traveling of members (for example, wing-to fuselage joint);
- **low-slip detachable** joints are performed with screws, bolts, nuts, pins, keys, wedges. They allow the members to shift, but while shifting the **ultimate breaking load** (joint of the landing gear strut retracted into the fuselage) **doesn't act** on the joints;

– **slip detachable** joints in process of slipping the members relatively to each other, the ultimate breaking load acts on the joint (slipping members of the wheel suspension on the strut, aileron hinge fitting, swiveling fitting of the variable-geometry wing in flight).

Let's note once more that slip joint is not determined by the extent of relative displacement of joined members but by the extent of loading them with relative displacement (Fig. 4.1). Therefore, fittings 1 are movable, though the relative displacement angles in these fittings are only some degrees. In fittings 2 the displacements are rather higher. But during displacing in these fittings negligible loads act. They displace only during the retraction and extension of the landing gear strut. There are no displacements in these fittings at the moment of maximum load – at impact of the strut against ground at touchdown. Therefore they are low-slip joints.

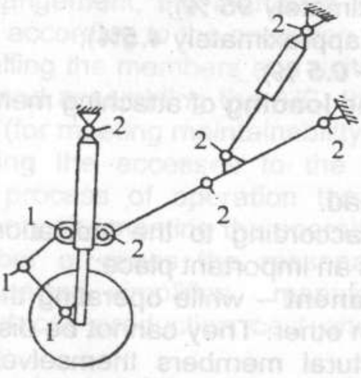

Fig. 4.1. Types of connections

For each of these types of joinings and joints the values of breaking bearing stresses are selected:

- for fixed permanent $\sigma = (1.0 \ldots 1.3)\ \sigma_b$;
- for fixed detachable $\sigma = 1.0\ \sigma_b$;
- for low slip $\sigma = (0.5 \ldots 0.6)\ \sigma_b$;
- for slip $\sigma = (0.2 \ldots 0.3)\ \sigma_b$, $\sigma = 0.3\ \sigma_b$ being allowed only when there is guaranteed lubricant in the fitting.

According to structural performing and outer loads the joining members and joined ones may carry bending, shear, bearing tensile (breaking) and compression stresses and they may be calculated for these stresses.

The most common type of **detachable joints** are **threaded**. The typical representative of such a type is a bolt-nut pair. While manufacturing airplanes, various threaded fasteners are used. They differ in their material, diameter, thread pitch, cut portion length, head and spin shapes (Fig. 4.2). Here the bolt types are represented.

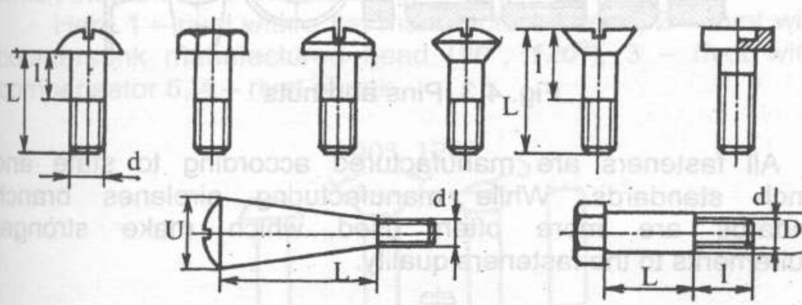

Fig. 4.2. Bolts and screws

For each joint the head shape is chosen according to aerodynamic requirements. Tightening force of bolted joint is normalized for each diameter. While choosing the head type, the availability of place for arranging tool, minimum weight requirements, load type and so on are taken into account. The bolts with hexagonal, half-round, square, round protruding heads and also with countersunk head are used. There are also the heads with holes for locking, the heads with hexagonal hole inside and so on.

In airplane structures the special bolts with magnified diameter as compared with nominal value are widely used. Such bolts are inserted with so-called **radial interference**. Interference abruptly increases fatigue life characteristics of joined members and provides tightness even without special devices.

Nuts differ according to the shape too (Fig. 4.3). Here the pin and nuts are represented. They are hexagonal, square, cylindrical with slot for a screwdriver, castellated, with specia members for locking. There are sealed nuts. There are ancho nuts (which are beforehand attached to one of the members fo providing attachment when there is only one-sided access.

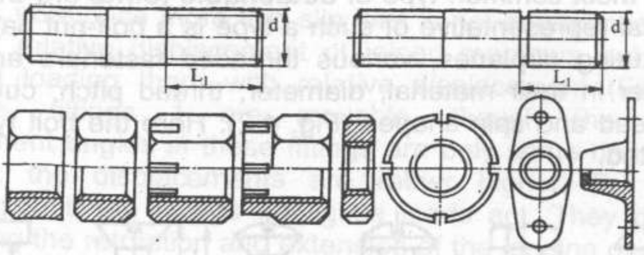

Fig. 4.3. Pins and nuts

All fasteners are manufactured according to state anc branch standards. While manufacturing airplanes branch standards are more often used which make stronge requirements to the fasteners quality.

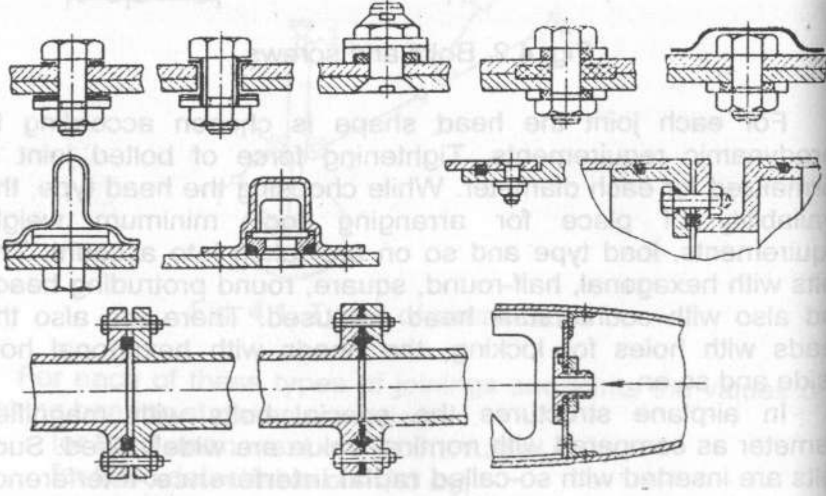

Fig. 4.4. Hermetic sealing of connections

For example, the bolts for general machine building are turned. The bolts for airplane items are headed. In the first case the thread is cut, in the second case it is rolled. It provides high strength properties of fasteners for airplanes and especially at alternating loads. But they are more expensive.

One shall not forget about joint sealing if required (Fig. 4.4).

Permanent joints may be made by some methods.

Riveting is the most common of the aircraft members joint. Here special joining members (rivets) are used (Fig. 4.5). Rivet heads may be round, flat, countersunk, for the installation of which the holes are countersunk.

Here 1 – rivet with a flat manufactured head, 2 – rivet with a countersunk manufactured head (***90°***, ***120°***), 3 – rivet with a compensator 5, 4 – rivet-shank.

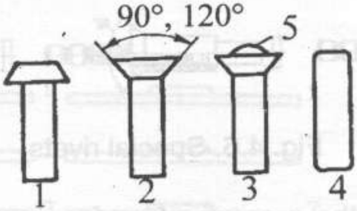

Fig. 4.5. Usual rivets

While forming the joints the rivets are plastically deformed in cold condition. The common joint results from drilling the holes in joined parts, from installing the rivets and upsetting by means of special tools. The special kinds of rivets do not require upsetting (Fig. 4.6, a – tucker pop rivet, b – rivet with a high shear strength).

In this case the snap head may be performed with one-sided access (tucker pop rivets, of increased shear strength, so-called bolts-rivets and so on).

Riveting may be performed by kicking method (kick and kickback), pressing method (rolling, flaring).

In those places, where high loads occur, one should refuse from using rivets and turn to the bolted joints. These joints are much heavier, more expensive and more labor – consuming (manpower of installing one bolt is about ***15*** times more than the manpower of installing one rivet). But they are more convenient due to their being disassembled if required.

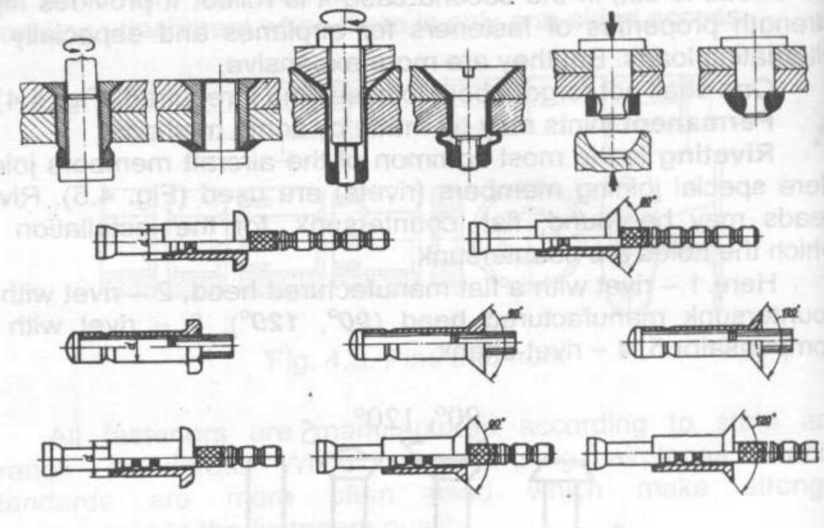

Fig. 4.6. Special rivets

Soldering is the process of performing the joints of metal parts in heated state by means of melted metal (solder). The temperature of a solder is rather lower than the melting temperature of the members to be joined. Therefore, undesirable structural changes do not occur in the material of the members to be joined.

Welding is the process of establishing the interatom bonds during general or local heating, or with plastic deformation, or while using both.

Arc welding is applied for joining the parts of considerable thickness, which are mechanically loaded. For welding the parts of non-ferrous metal the inert gases are used, which insulate the arc from the air (oxygen). The **argonarc welding** is applied for welding the parts of aluminum alloys, which have been widely used in aircraft items.

Resistance spot and roll welding is used for joining thin sheets (up to **6** mm).

Gas welding is performed by means of a welding torch supplied with oxygen and acetylene and additive material as a rod.

Ultrasonic welding is founded on using the high frequency oscillations causing heating in the contact area. In addition to oscillations considerable static forces are applied to the parts. As a result of joint action of high frequent oscillations, friction forces, heat and compressive forces the intermolecular forces of contact are produced.

The main advantage of welded joints is minimum weight.

The main disadvantages of welded joints are:

- formation of residual stresses in the weld. To relieve these stresses the additional heat-treatment of the assembly shall be performed;
- warping hazard of the structure. In this case the part shall be straightened.

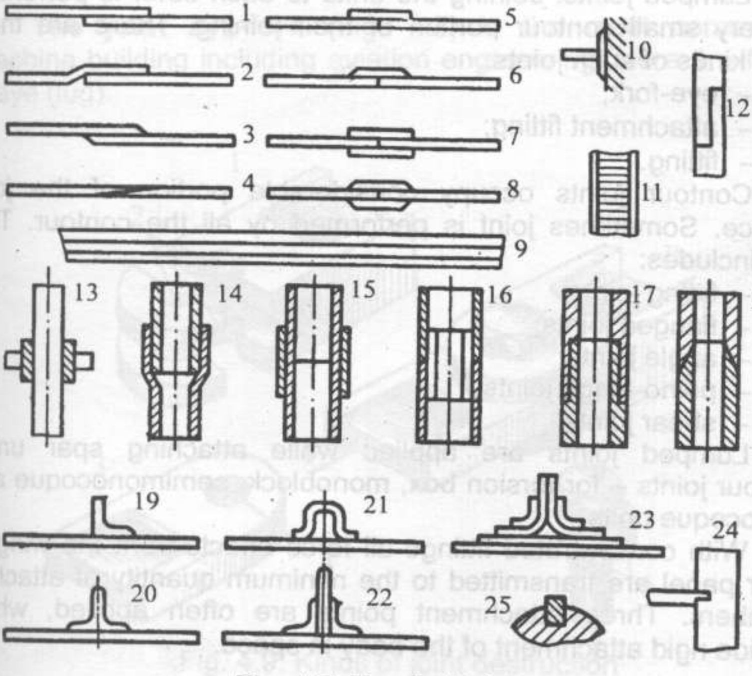

Fig. 4.7. Bonded joints

Bonded joints have high qualities (high fatigue life, tightness, good surface quality, low cost). Bonding is the process of obtaining the permanent joint with using the materials having adhesion to the materials, which the parts are made of.

Pure bonded joints are seldom applied to load-carrying structures because of possible glue line break-down during long operation. Combined joints – glue-welded, riveted are more often applied (the first aircraft, where such joints were applied, was the Antonov-24). Adhesion may occur under both standard and specially created conditions.

Examples of structural couplings with bonded joint are given in Fig. 4.7.

Unit attachment fittings

According to their structural building the joints are subdivided into lumped (concentrated) and contour (distributed).

Lumped joints. Joining the units to each other is performed on very small contour portion of their joining. There are three main kinds of such joints:

- eye-fork;
- attachment fitting;
- fitting.

Contour joints occupy considerable portion of the joint surface. Sometimes joint is performed by all the contour. This kind includes:

- fitting joints;
- flanged joints;
- angle joints;
- piano-hinge joints;
- shear joints.

Lumped joints are applied while attaching spar units, contour joints – for torsion box, monoblock, semimonocoque and monocoque units.

With concentrated fittings all force effects from the wing or outer panel are transmitted to the minimum quantity of attached members. Three attachment points are often applied, which provide rigid attachment of the body in space.

These joints are not complicated from the installation-removal point of view, but such a structure of joints has low survivability and reliability.

With distributed attachment fitting force effects are removed directly in those places where they approach the break. The structure becomes lightened, but complicated for the installation-removal.

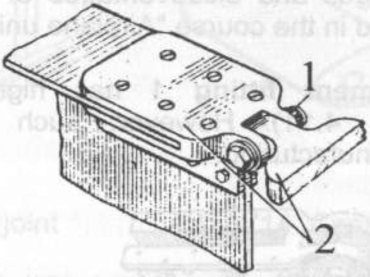

Fig. 4.8. "Eye-fork" joint

The joint eye-fork (Fig. 4.8) is the most common in machine building including aviation engineering. Here 1 – fork, 2 – eye (lug).

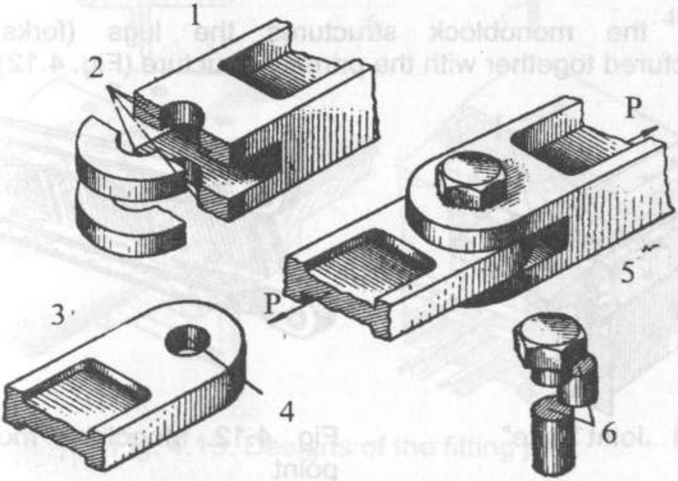

Fig. 4.9. Kinds of joint destruction

Joined members and fasteners carry the rupture, shear and bearing stresses (Fig. 4.9).

Here 1 – rupture, 2 – rupture planes, 3 – bearing, 4 – bearing area, 5 – shear, 6 – shear planes. The lugs (forks) in such joints may be arranged horizontally and vertically (Fig. 4.10).

The advantages and disadvantages of each arrangement shall be considered in the course “Airplane units design”.

The attachment fitting 1 has higher reliability and survivability (Fig. 4.11). However, such a joint is more complicated in manufacturing.

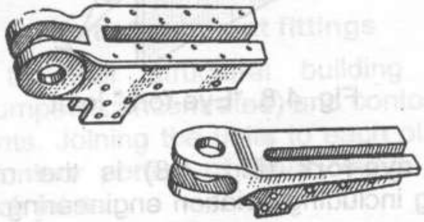

Fig. 4.10. Vertical and horizontal eyes arrangement

On the monoblock structures the lugs (forks) are manufactured together with the primary structure (Fig. 4.12).

Fig. 4.11. Joint “rake”

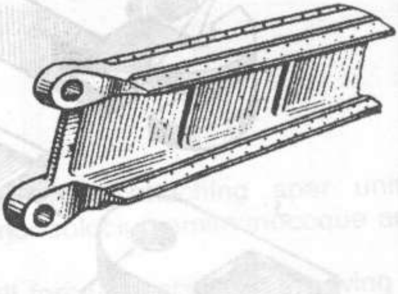

Fig. 4.12. Monolithic mounting point

In the “eye-fork” joints and “attachment fitting” the bolts carry the shear stress.

The fitting joints may be both lumped and contour ones. In spar structures the fitting may be the lumped joint (Fig. 4.13, here 1 – strut, 2 – joint bolt, 3 - fitting).

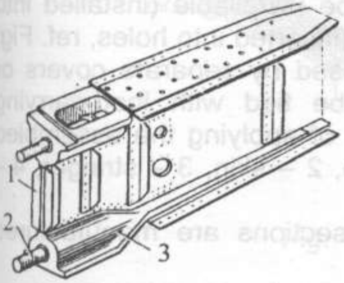

Fig. 4.13. Dot fitting joint

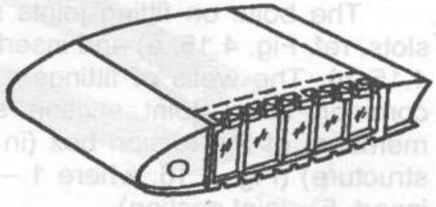

Fig. 4.14. Contour fitting joint

In torsion box and monoblock structures the fitting is used as a contour joint (Fig. 4.14).

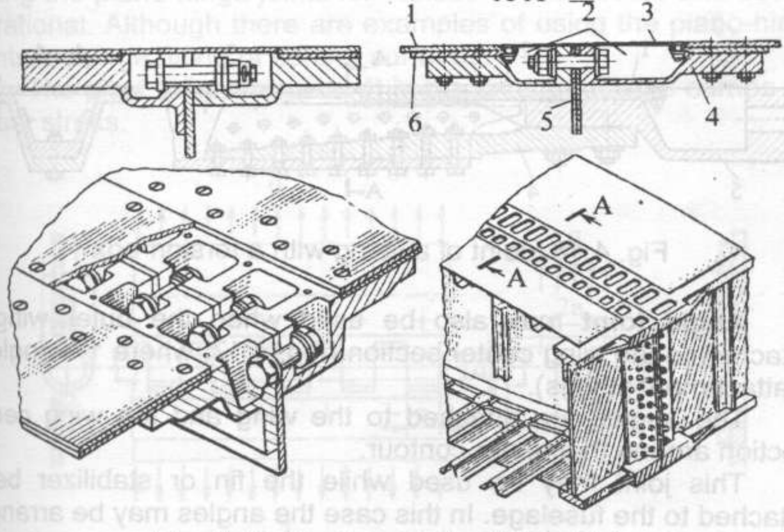

Fig. 4.15. Designs of the fitting joint

In a common case fitting joint consists of two joint sections with the wells for arranging the bolt head and nut (Fig. 4.15, here 1 – skin, 2 – well, 3 – detachable strip, 4 – joint section, 5 – rib web, 6 - strap).

The bolts on fitting joints may be installable (installed into slots, ref. Fig. 4.15, a) and insertable (inserted into holes, ref. Fig. 4.15, b). The wells of fittings are closed by separate covers or common strip. Joint section shall be tied with load-carrying members of the torsion box (in case of applying the assembled structure) (Fig. 4.16, where 1 – strap, 2 – skin, 3 – stringer, 4 – insert, 5 – joint section).

In one-piece panels the joint sections are manufactured together with the panel itself.

In fitting joints the bolts carry complex rupture and shear stresses.

Flanged joints are more often used in fuselage joints. In this case the flanges are load-carrying attachment frames of the continuous fuselage sections. The bolts carry rupture and shear stresses.

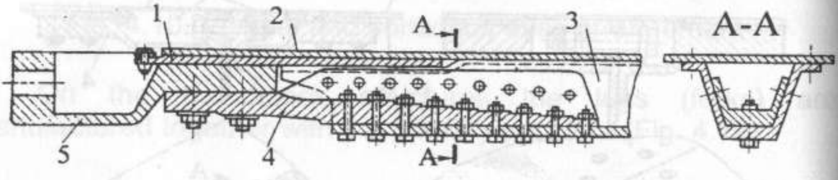

Fig. 4.16. Joint of a fitting with a torsion-box

Angle joint may also be used when the outer wing is attached to the wing center section (Fig. 4.17, where 1 – angle, 2 – attachment fittings).

The angles are attached to the wing and the wing center section around their inner contour.

This joint may be used while the fin or stabilizer being attached to the fuselage. In this case the angles may be arranged around outer contour of the units.

The bolts in these joints carry rupture and shear stresses.

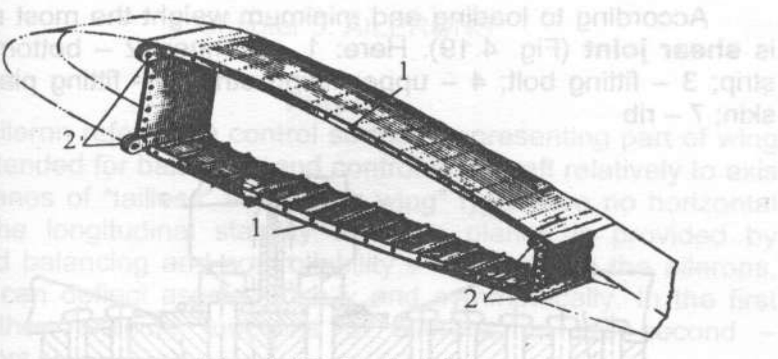

Fig. 4.17. Angle joint

Piano-hinge joint (Fig. 4.18) has high survivability, low weight.

But owings to specific character of the aircraft structures (thin shells) it may be applied only for the members arranged from one side of the unit section (flaps, interceptors, spoilers). Using the piano-hinge joints for various access doors and covers is rational. Although there are examples of using the piano-hinge joints for hinge fitting of control surfaces.

The pivot (piano-hinge rod) in piano-hinge fittings carries the shear stress.

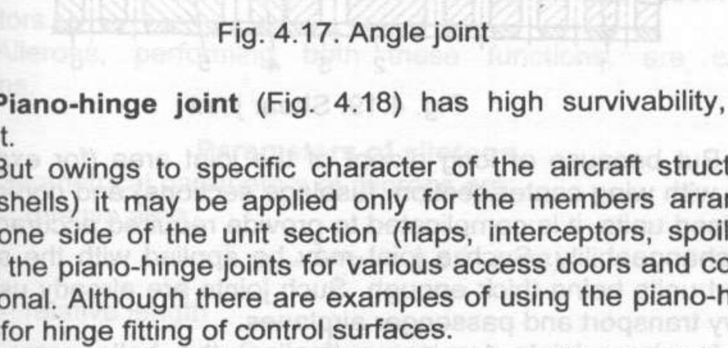

Fig. 4.18. Piano-hinge joint

According to loading and minimum weight the most rational is **shear joint** (Fig. 4.19). Here: 1 – stringer; 2 – bottom fitting strip; 3 – fitting bolt; 4 – upper fitting strip; 5 – fitting plate; 6 - skin; 7 – rib

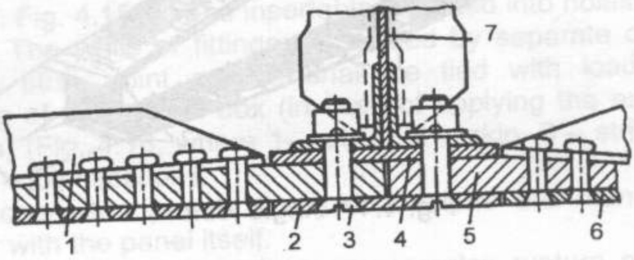

Fig. 4.19. Shear joint

But because of long extent of the joint area (for example, wing with wing center section, fuselage sections) and non-rigidity of joined units, it is complicated to provide required accuracy and interchangeability. Such a joint may be applied with the skin of joined units being thick enough. Such joints are already used on heavy transport and passenger airplanes.

In shear joints (as name implies) the bolts carry shear stresses. And despite the fact that the shear strength of material is approximately two times lower than tensile one, shear load for stiffeners is more preferable in comparison with tension. This question will be considered in detail in the course "Airplane units design".

Chapter 5. AILERONS

Purpose

Aileron refers to a control surface, representing part of wing and intended for balancing and control of aircraft relatively to axis ***0x***. Planes of "tailless" and "flying wing" type have no horizontal tail. The longitudinal stability on such planes is provided by forward balancing and controllability – by declining the ailerons, which can deflect asymmetrically and symmetrically. In the first case they execute functions of ailerons, in the second – elevators.

Ailerons, performing both these functions, are called elevons.

Parameters of ailerons

Geometrical parameters of ailerons are:

– relative area

$$\bar{S}_{aileron} = \frac{S_{aileron}}{S} = 0.05...0.08;$$

– relative length

$$\bar{l}_{aileron} = \frac{l_{aileron}}{l} = 0.3...0.4;$$

– relative chord

$$\bar{b}_{aileron} = \frac{b_{aileron}}{b} = 0.25...0.3;$$

Principle of operation

The ailerons are located on the wing tips. They are rear part of an airfoil section, which can be deflected up and down (Fig. 5.1). Both ailerons are deflected simultaneously. The ailerons are deflected to opposite sides - one upward, another - downward.

At deflection of an aileron downwards the airfoil camber of a wing is convex upwards. Thus the lift is increased on a wing (in a zone of an aileron location).

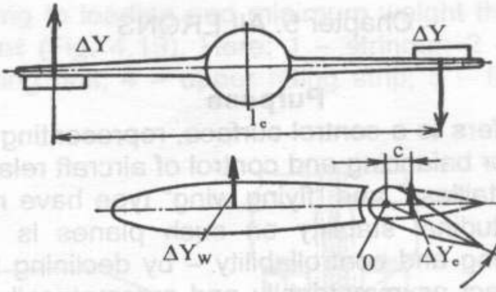

Fig. 5.1.Principle of aileron operation

At deflection of an aileron up airfoil camber of a wing decreases (and even becomes convex downwards). In this case lift on a wing decreases.

The aerodynamic characteristics

Difference of lift forces arising on both wings at respectively opposite deflection of ailerons at angle of attack α, (Fig. 5.2) creates moment, which causes the roll of a plane to the side of the raised aileron. In case of flight at angles of attack close to stall (α_2) opposite action of ailerons is possible. It will take place in that case when the wing with lowered aileron will appear in poststall zone. In this case ΔC_{L2} will be negative and on absolute size $|\Delta C_{L2}|>|\Delta C_{L1}|$, that will create a roll to the side of a wing with lowered aileron. Opposite action of ailerons can result in accident especially at flights at high angles of attack at take off – landing, just near the ground..

One of the ways to avoid it is application of differentially deflected ailerons, which have angles of upwards deflection greater than those of downwards deflection.

Change of the characteristics $C_L = f(\alpha)$ for differentially operated ailerons are shown in Fig. 5.3. As it is evident from curves, at an angle of attack α_2 the deflection of ailerons will not cause their opposite action as $|\Delta C_{L2}|>|\Delta C_{L1}|$. Application of such ailerons increases the range of safe angles of attack.

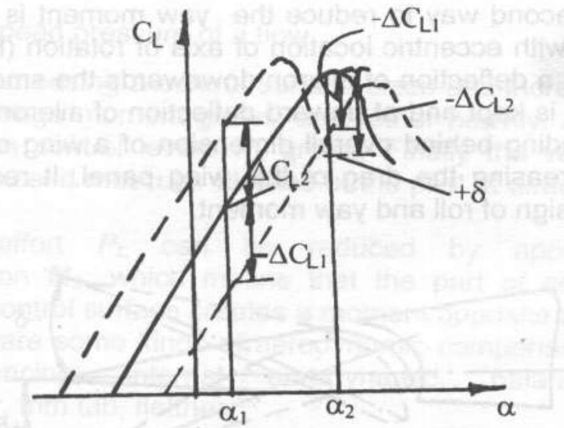

Fig. 5.2. Aerodynamic characteristics of usual ailerons

The deflection of ailerons in opposite directions for equal angles can cause a yaw moment because of difference C_D of left-hand and right-hand wings. Yaw moment, as a rule, turns a plane to the side of the lowered aileron.

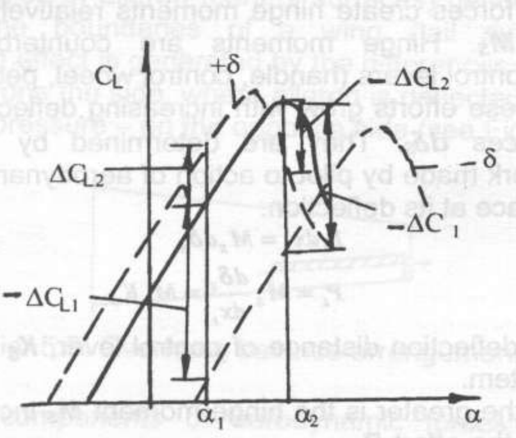

Fig. 5.3. Aerodynamic characteristics of differential ailerons

If differential ailerons are used, the yaw moment can appear close to zero.

The second way to reduce the yaw moment is application of ailerons with eccentric location of axis of rotation (Fig. 5.4). In this case at a deflection of aileron downwards the smoothness of a wing flow is kept and at upward deflection of aileron its leading edge protruding behind overall dimension of a wing creates stall and by increasing the drag of this wing panel. It results in the analogous sign of roll and yaw moment.

Fig. 5.4. Aileron with lowered rotation axis

Compensation of hinge moment

At a deflection of ailerons (as other control surfaces) the aerodynamic forces create hinge moments relatively to the axis of rotation M_S. Hinge moments are counterbalanced on appropriate control levers (handle, control wheel, pedal) by pilot's efforts P_L. These efforts grow with increasing deflection angle of control surfaces $d\delta_S$. They are determined by condition of equality of work made by pilot to action of aerodynamic forces on a control surface at its deflection.

$$P_L dx_L = M_s d\delta_s$$

$$P_L = M_s \frac{d\delta_s}{dx_L} = M_s K_s$$

where dx_L – deflection distance of control lever, K_S — gear ratio of control system.

Hence, the greater is the hinge moment M_S increasing, also the greater is the effort P_L.

Hinge moment of control lever:

$$M_s = m_s S_{al} b_{al} \frac{\rho v^2}{2},$$

where m_S - factor of a hinge moment;

S_{al}, b_{al} - area and chord of control surface accordingly;

$\frac{\rho v^2}{2}$ - speed pressure of a flow.

With increasing a control surface sizes and increasing flight speed the hinge moment grows, and rather heavily. Accordingly the effort on control levers P_L grows. Finally the value of this effort can exceed muscular abilities of the pilot at direct control of airplane.

The effort P_L can be reduced by application of compensation M_S, which means that the part of aerodynamic force on a control surface creates a moment opposite to M_S.

There are some kinds of aerodynamic compensation: axial, horn balancing, internal aerodynamic, balancing tab, servorudder, trim tab, flettner.

Axial compensation M_S

These ailerons are called as **"set-back hinge ailerons"**. This type of compensation is the most widespread. In this case the compensator is distributed lengthwise of a control surface (Fig. 5.5). The airfoil of this compensator is designed so that at maximum angles of aileron (control surfaces) deflection it would not leave the boundaries of a wing (tail surfaces). The compensating effect is generated by the differences of pressures: increased on one the side, where aileron is deflected downwards, and lowered pressure – on the opposite side (see Fig. 5.6).

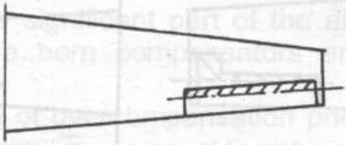

Fig. 5.5. Overhang balance arrangement

Hence, components of aerodynamic forces Y_k and Y_p perpendicular to a symmetry plane of a wing (tail surfaces) give the moment of opposite sign in relation to the axis of aileron (control surface) rotation and, thus, reduce M_S, and give moment of one sign without reducing efficiency of aileron (control surfaces) in relation to the plane center of mass.

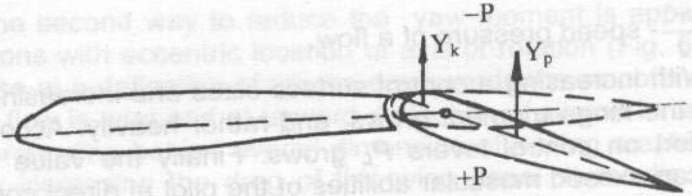

Fig. 5.6. Overhang balance operation

The relative sizes of axial compensation $S_{ok} = \frac{S_{ok}}{S_p}$ in some cases equal ***0.25***. Greater increase of relative compensator area quickly equals moments of aileron and compensator. It results in overcompensation. Overcompensation is characterized by occurrence of opposite pressure on control levers of a control system, that is inadmissible.

Horn aerodynamic compensation

This type of compensation is called as **"horn-balanced ailerons"**. This type of compensation is carried out with the help of a compensator representing a part of the control surface located before the axis of rotation at a boundary of a control surface or in any other place spanwise (Fig. 5.7).

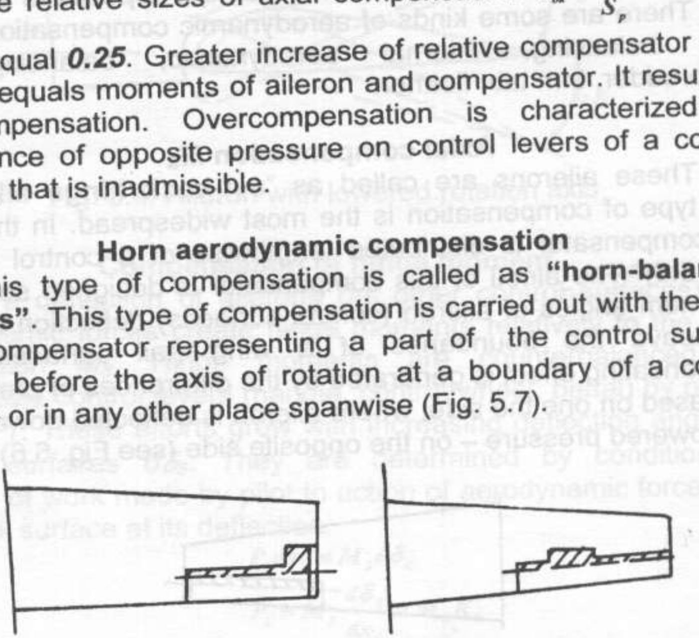

Fig. 5.7. Horn balance arrangements

Since the horn compensator is located before the axis of aileron (control surfaces) rotation, it is deflected to the opposite side, when the main aileron deflects. In this case aerodynamic forces resultant in R_p and R_k arising main part of aileron and horn compensator can be resolved into two mutually perpendicular directions: aligned with a plane of aileron symmetry $\boldsymbol{P_p}$ and $\boldsymbol{P_k}$ and normal to it – $\boldsymbol{Q_p}$ and $\boldsymbol{Q_k}$ (Fig. 5.8). Hence, the forces Q_p and Q_k give moments of opposite signs in respect to aileron axis of rotation. It means that horn compensator reduces hinge moment of aileron (control surfaces). The moment of Q_p and Q_k forces taken in respect to an airplane center of mass have the same sign. Hence, the horn compensator does not reduce efficiency of aileron (control surfaces).

At low angles of aileron deflection horn compensator, being a very sensitive device, effectively reduces M_S value. But at deflection of aileron at higher angles the slot appears between compensator and wing. It results in airflow leakage through the slot and causes deterioration of its characteristics.

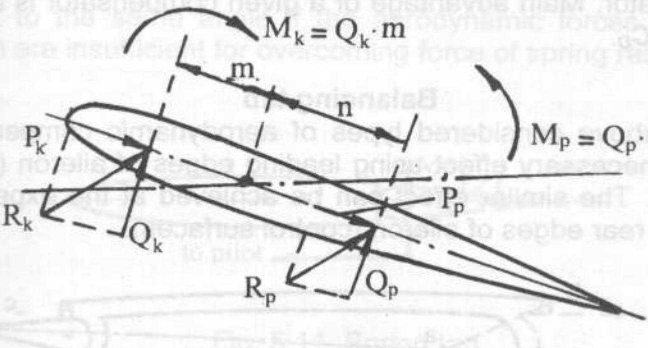

Fig. 5.8. Horn balance operation

As a result the significant part of the aileron area reduces efficiency. Therefore horn compensators are applied for light low-speed planes.

For elimination of overcompensation phenomenon the area of a horn compensator $\overline{S}_{hc}$ is equal to not more than ***0.12***.

Internal aerodynamic compensation

This type of compensation is called as "**pressure-seal balanced ailerons**". It is applied more often on ailerons. It represents an axial compensator, placed in a chamber with narrow slots (Fig. 5.9). The chamber is divided by a hermetic flexible partition, attached from one side to the nose of aileron, and on the other – to the web (spar or false spar).

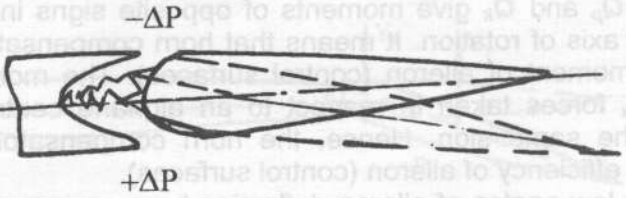

Fig. 5.9. Internal aerodynamic balance

Nose of aileron is influenced by the difference of static pressures, which are established at a given regime of flight in both cavities of a chamber. It increases efficiency of an axial compensator. Main advantage of a given compensator is a small increase C_D.

Balancing tab

All above considered types of aerodynamic compensation reached necessary effect using leading edges of aileron (control surfaces). The similar effect can be achieved at the expense of using the rear edges of aileron (control surfaces).

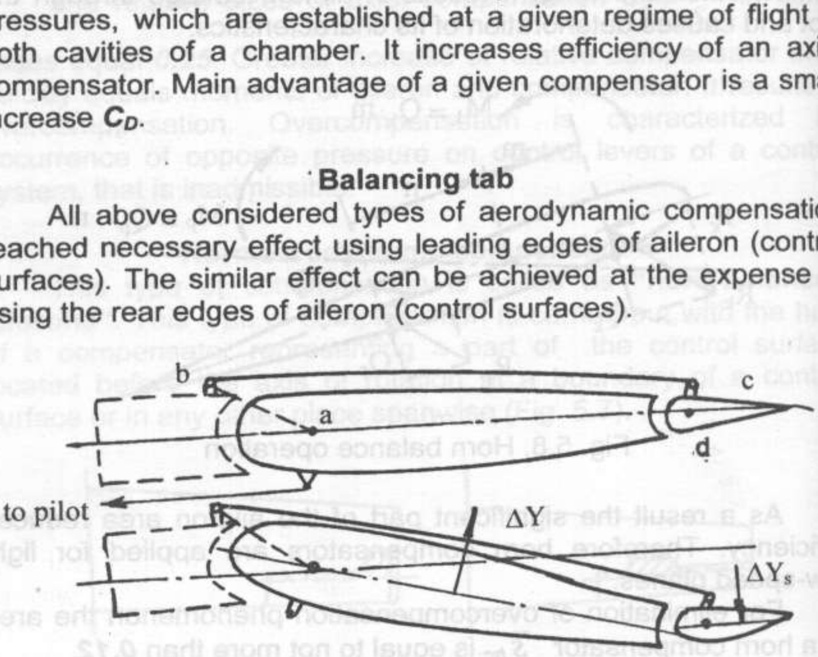

Fig. 5.10. Balance tabs

Balancing tab is a part of aileron located at its rear edge. It is deflected simultaneously with aileron deflection (Fig. 5.10). Hinge quadrilink at deflection of aileron changes configuration in such a manner that the balancing tab deflects to the side opposite to aileron deflection. The area ratio of balancing tab S_{bt} is equal to ***0.06...0.08***. Ratio between deflection angles of aileron

δ_{al} and deflection angles compensator δ_{bt} is determined by configuration and sizes of hinge quadrilink. For example, if in initial state it will be rectangular, then $\delta_{bt} = \delta_{al}$.

Balancing tabs have such disadvantages:

- efficiency of aileron decreases, as the effort on balancing tab is opposite to that on aileron;
- balancing tab can be a reason of aileron (control surfaces) vibrations.

Besides usual types, spring balancing tabs are applied (Fig. 5.11). In this case, besides usual hinged joint with aileron balancing tab is connected with aileron by means of a spring. At a deflection of aileron the spring balancing tab is turned together with it to the same angle if the aerodynamic forces acting on aileron are insufficient for overcoming force of spring resistance.

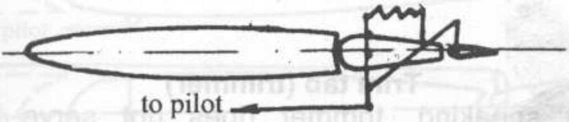

Fig. 5.11. Spring tab

The low aerodynamic forces are characteristic features for low speeds of flight and minor angles of aileron deflection. But in this case compensation of low M_S is not required. With the increase of aerodynamic forces effort of a spring will be overcome and the compensator will execute its purpose. The unloading created by spring compensator is proportional not to the angle of deflection (as usual), but to the effort in control system. This quality is especially important for airplanes, on which P_L strongly increases with increasing the flight speed even at low angles δ_{al}.

The disadvantage of spring balancing tab is its sensitivity to vibrations at loose tightening of springs.

Servo-tab

It is a device similar to a balancing tab, but it is operated by a pilot (Fig. 5.12). For deflection of the appropriate aileron (control surfaces) the pilot deflects servo-tab, which deflects the whole aileron (control surfaces) until the hinge moments of servo-tab and aileron (control surfaces) become equal.

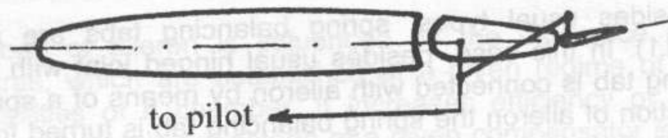

Fig. 5.12. Servo tab

Hence, operating the servo-tab the pilot controls with the whole aileron (control surfaces) and, thus, he controls the airplane.

Trim tab (trimmer)

Strictly speaking, trimmer does not serve for hinge moment reduction of control surface. It serves for complete removal of effort from a control lever on steady regimes of flight. That is, it is a means of aerodynamic balancing of a plane. Trimmer differs from the described earlier balancing tab in that it is operated by the pilot directly (Fig. 5.13).

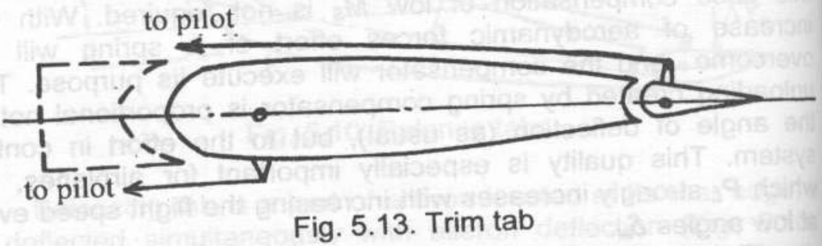

Fig. 5.13. Trim tab

For balancing a plane trimmer deflects in opposite to aileron (control surfaces) side until the pressure on a control lever becomes equal to zero or close to it, that is, until hinge moment of aileron (control surfaces) is balanced by hinge moment of trimmer.

The area ratio $\bar{S}_{tr} = 0.04...0.08$.

Flettner (trimmer-balancing tab)

The functions of trimmer and balancing tab can be incorporated in one unit (Fig. 5.14). Its kinematic circuit is received from the usual one of balancing tab, in which hinge '***b***' (see Fig. 5.14) is made movable chordwise and controllable.

With a fixed position of hinge '***b***' and deflection of aileron flettner operates as balancing tab, if moving of hinge '***b***' and fixed aileron – as trimmer.

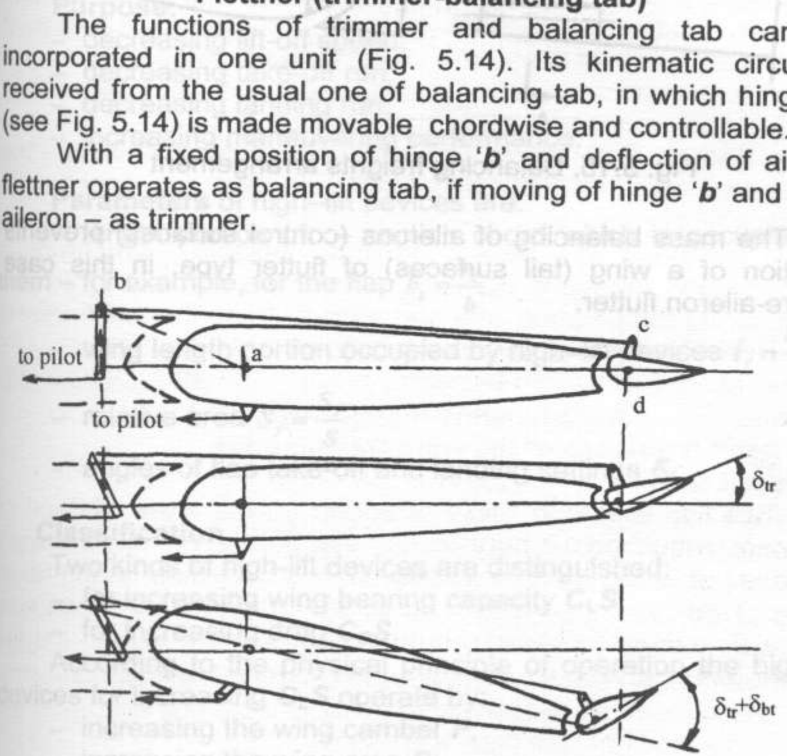

Fig. 5.14. Geared trim tabs

Mass balancing of ailerons (control surfaces)

These ailerons are called as "mass-balanced ailerons". The mass balancing of aileron (control surfaces) consists in alignment of its center of mass with an axis of rotation. It is reached with installation of counterbalancing mass on the aileron (concentrated or distributed) in its nose part (Fig. 5.15). One of mass balancing ways is arrangement of an aileron axis of rotation behind the spar. In this case the spar serves as balance.

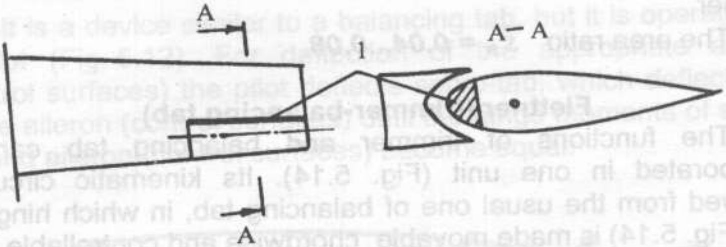

Fig. 5.15. Balancing freights arrangement

The mass balancing of ailerons (control surfaces) prevents vibration of a wing (tail surfaces) of flutter type, in this case flexure-aileron flutter.

Chapter 6. HIGH-LIFT DEVICES

Purpose:

- decreasing lift-off speed;
- decreasing take-off run;
- decreasing landing run;
- increasing maneuvering performance.

Parameters of high–lift devices are:

- length portion of – section chord which is occupied by them – for example, for the flap $\bar{b}_s = \frac{b_f}{b}$;
- wing length portion occupied by high–lift devices $\bar{l}_f = \frac{l_f}{l}$;
- relative area $\bar{S}_f = \frac{S_f}{S}$;
- angles of flap take-off and landing settings δ_f.

Classification

Two kinds of high-lift devices are distinguished:

- for increasing wing bearing capacity $C_L S$;
- for increasing drag $C_D S$.

According to the physical principle of operation the high-lift devices for increasing $C_L S$ operate by:

- increasing the wing camber F;
- increasing the wing area S;
- maintaining the wing attached flow;
- combined.

Requirements to the high–lift devices $C_L S$:

- producing the lift force by the wing which is equal to aircraft weight at possible lower speed;
- not to produce additional drag during those flying modes when the high-lift devices are not used;

– to produce necessary lift force in take-off position without great drags increment to provide quick acceleration and safe climbing by thrust excess;

– to provide safe take-off and climbing of multiengine aircraft with one engine failed;

– in landing position to produce necessary lift force at greater drag (less lift-drag ratio). It simplifies landing. In this case necessity to maintain accelerated engine revolutions during gliding facilitates the approach on go around;

– during extending and retracting the devices the longitudinal trim characteristics must be changed smoothly in tolerance limits;

– mechanisms must provide reliable synchronous extension and retraction of the devices of the left and right outer wings during the planned time and provide fixing the mechanisms in take-off, landing and retracted positions.

Aerodynamic high-lift devices

High-lift devices of the wing trailing edge

Split flaps.

Split flap is a rigid panel arranged on the lower surface of the wing rear portion. It may occupy that portion of the wing span which is not occupied with an aileron. It is deflected during take-off up to ***25°***,during landing – up to ***50°***. Difference in deflection angles is caused by increasing the coefficient C_D at high angles to unacceptable values while taking-off. During landing increasing C_D is even desirable (ref. requirements).

Some kinds of split flaps are used:

– plain (Fig. 6.1). While deflecting a plain split flap the lower surface camber of the wing section is increased.

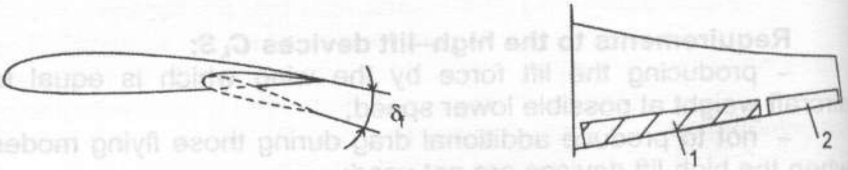

Fig. 6.1. Plain split flap

It increases the coefficient C_L. The split flap chord may reach ***30%*** of the wing chord (***$B_f = 0.3$***). In this case lift coefficient increment may be equal to ***$\Delta C_L=0.65...0.75$***;

– extending (Fig. 6.2). Extending split flap does not only change the lower surface camber of the wing section, but also increases the area.

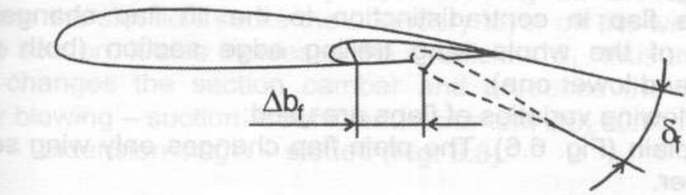

Fig. 6.2. Extending split flap

In this case the coefficient increment C_L may be equal to ***$\Delta C_L=0.75...0.85$***;

– Fowler flap (Fig. 6.3);

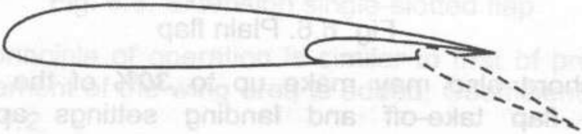

Fig. 6.3. Fowler split flap

– Goudge flap is similar to the Fowler one, but kinematics of its retraction and extension is simpler (Fig. 6.4);

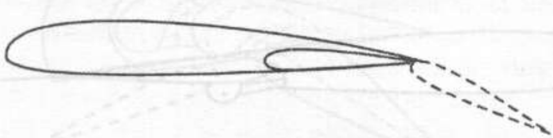

Fig. 6.4. Godge split flap

– TsAHI flap (Fig. 6.5) is characterized by its having different configuration in the ***1st*** take-off and the ***2nd*** landing positions.

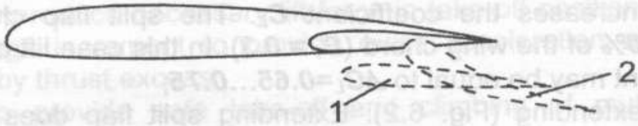

Fig. 6.5. TsAHI split flap

Flaps.

The flap in contradistinction to the lift flap changes the camber of the whole wing trailing edge section (both upper section and lower one).

Following varieties of flaps are used:

– plain (Fig. 6.6). The plain flap changes only wing section of camber.

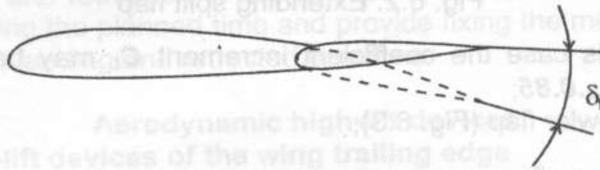

Fig. 6.6. Plain flap

Its chord also may make up to ***30%*** of the wing chord ($\overline{B}_f = 0.3$), flap take-off and landing settings approximately correspond to analogous lift flap settings. Coefficient increment ***ΔC_L=0.45…0.45***;

– slotted (Fig. 6.7). In this case the slot is formed between its nose section and the wing.

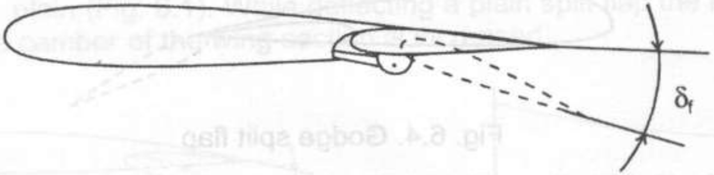

Fig. 6.7. Slotted flap

Slot section must meet two requirements:

– slot must be a convergent channel (confuser). In this case the flow, which passes through this channel during flap deflection, will increase its speed. Dynamic pressure will be increased on the upper portion of the flap section. It will result in the later stall (boundary layer flowing takes place). But it will take place only in that case if the second requirement is met:

- the flow accelerated into the slot must pass on the flap surface tangentially to the nose part of its section.

In addition to boundary layer blowing on the upper flap surface the slot flow sucks the boundary layer off the wing trailing edge section. It also increases the coefficient C_L. thus the slotted flap changes the section camber and produces the boundary layer blowing – suction. Coefficient increment $\Delta C_L=0.5\ldots0.6$;

- extension single – slotted (Fig. 6.8).

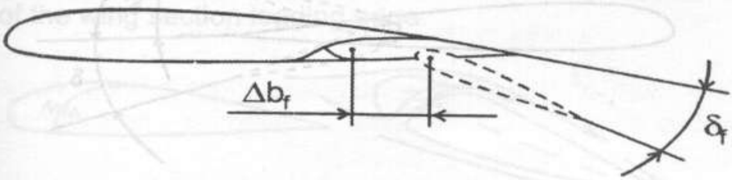

Fig. 6.8. Extension single-slotted flap

The principle of operation is similar to that of previous flap but enlargement of the wing area is added. Coefficient increment $\Delta C_L=1.1\ldots1.2$.

- extension double–slotted (Fig. 6.9), coefficient increment $\Delta C_L=1.4\ldots1.5$;

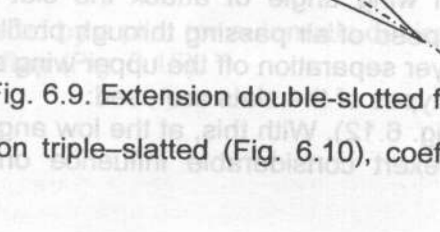

Fig. 6.9. Extension double-slotted flap

- extension triple–slatted (Fig. 6.10), coefficient increment $\Delta C_L=2.0\ldots2.5$;

Fig. 6.10. Extension triple-slotted flap

Increasing the number of slots results in area enlargement on which boundary layer blowing and suction take place.

– flaperon (Fig. 6.11). Ordinary flaps deflect only down. The flap, which can deflect not only down, but up, is a flaperon.

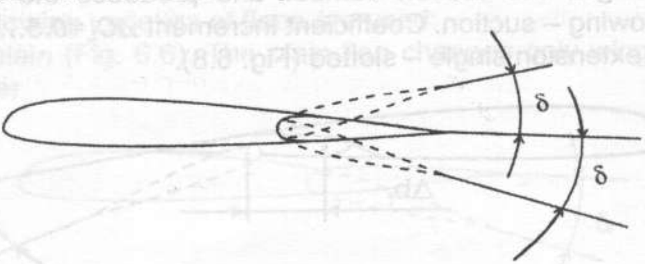

Fig. 6.11. Flaperon

Flaperons are used to improve maneuverability of fighters.

– drooped ailerons. During take-off and landing both ailerons deflect down. Here they operate simultaneously as control surfaces and producing roll.

High-lift devices of the wing leading edge

Slats.

The slat is arranged forward of the wing leading edge. The profiled slot is formed between the slat and the wing. In this case the slotted wing is formed. The slotted wing increases not only C_L but in contradistinction to the lift flaps and flaps it also increases α_{cr}. At the high wing angle of attack the slat downwash and increasing the speed of air passing through profiled slot prevents the boundary layer separation off the upper wing surface.

Now three types of the slats are used:

– **fixed** (Fig. 6.12). With this, at the low angles of attack the slot does not exert considerable influence on the wing flow pattern.

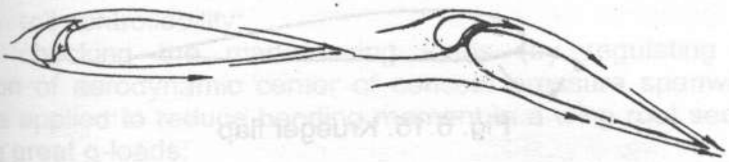

Fig. 6.12. Fixed slat operation

At high angles of attack the flow directed on a tangent to the upper wing surface passes through the profiled slot. It shifts the separation point of boundary layer backward on the section;

- **aerodynamically operated** (Fig. 6.13). Extending (from the wing leading edge) takes place under the aerodynamic action at high angles of attack, which cause depression in the upper part of the wing section leading edge.

Fig. 6.13. Aerodynamically operated slat

In this case, at low angles of attack forces press the slat to the wing leading edge.

- **movable** (Fig. 6.14).

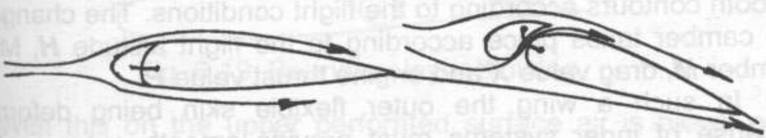

Fig. 6.14. Turned down slat operation

It is operated by a pilot (or automatic devices) if required.

Krueger flap (Fig. 6.15).

Fig. 6.15. Krueger flap

It is the plate on the lower wing surface in its root leading edge. While the flap being deflected the wing area and section camber are enlarged.

Leading edge flap (Fig. 6.16).

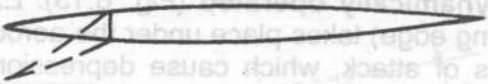

Fig. 6.16. Leading edge flap

It is used on thin wings where slot effect is insignificant. As the leading edge flap considerably increases α_{cr}, its application in combination with the flap is desirable.

Adaptive wing (Fig. 6.17).

Fig. 6.17. Adaptive wing

This wing can change the section camber in flight keeping smooth contours according to the flight conditions. The change of the camber takes place according to the flight altitude H, Mach number M, drag value X and engine thrust value P.

In such a wing the outer flexible skin being deformed because of inner systems must provide smooth outer contour fitted to the conditions of current flight regime as much as possible. Usually all the procedure of wing "adaptation" to the conditions must be carried out automatically by computer.

The purpose is to provide minimum C_D at every value C_L. Forward and after portions of the wing must be made of flexible skin.

Application peculiarities of an adaptive wing:
- capability of cruise lift-drag ratio optimization;

– roll controllability;

– checking the maneuvering loads (by regulating the position of aerodynamic center of console pressure spanwise). This is applied to reduce bending moment in a wing root section during great g-loads;

– direct lift control;

– capability of response attenuation to atmospheric disturbances.

Powered high-lift devices

The names of these devices imply that in this case power take off or loss of engine thrust takes place.

Coanda's effect (Fig. 6.18).

Fig. 6.18. Coanda's effect

In this case the effect of re-attaching gas flow to the curvilinear surface is used and additional lift force is created.

Value of C_L here may reach ***3.0-4.0***.

Boundary layer blowing (Fig. 6.19).

Fig. 6.19. Boundary layer blowing

With this on the upper perforated surface air is blown out taken from the engine compressor by shifting the separation point of boundary layer backward. Value of C_L may reach ***2.0-3.0***.

Boundary layer suction (Fig. 6.20).

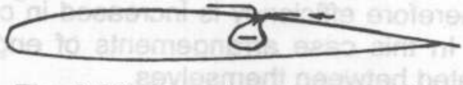

Fig. 6.20. Boundary layer suction

Boundary layer suction belongs to the principle of boundary layer control too. In this case through the perforated upper wing surface the boundary layer is sucked into the collector arranged inside the wing. Values of C_L are the same as at blowing off.

Jet flap (Fig. 6.21).

As researches have shown, the greatest lift augmentation of the wing is attained by exhausting air jet (gases) through the narrow slot arranged near wing trailing edge or flap, down at an angle of incoming flow.

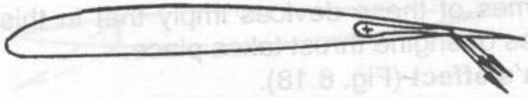

Fig. 6.21. Jet flap

The use of jet flaps increases C_{Lmax} ***10*** times and more. But in this case great engine power consumption is required.

Combined high-lift devices

In combined high-lift devices the combinations of different operational principles are used: changes of section camber, increasing area and boundary layer control.

Airflow of flaps by the slipstream (Fig. 6.22).

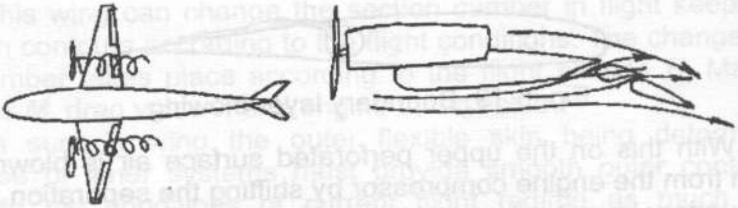

Fig. 6.22. Airflow of flaps by the slipstream

The air speed of the slipstream is considerably higher than that of flight; therefore efficiency is increased in comparison with ordinary flaps. In this case arrangements of engines and flaps must be correlated between themselves.

Airflow of flaps by the exhaust engine jet (Fig. 6.23). In this case the relation of engines and flaps is necessary.

Boundary layer suction belongs to the principle of boundary layer control too. In this case through the perforated upper wing surface the boundary layer is sucked into the collector arranged inside the wing. Values of C_L are the same as at blowing off.

Jet flap (Fig. 6.21).

As researches have shown, the greatest lift augmentation of the wing is attained by exhausting air jet (gases) through the narrow slot arranged near wing trailing edge or flap, down at an angle of incoming flow.

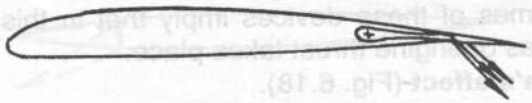

Fig. 6.21. Jet flap

The use of jet flaps increases C_{Lmax} ***10*** times and more. But in this case great engine power consumption is required.

Combined high-lift devices

In combined high-lift devices the combinations of different operational principles are used: changes of section camber, increasing area and boundary layer control.

Airflow of flaps by the slipstream (Fig. 6.22).

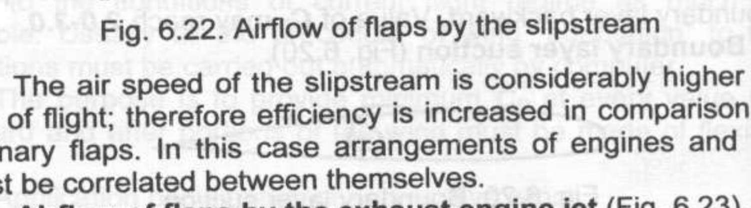

Fig. 6.22. Airflow of flaps by the slipstream

The air speed of the slipstream is considerably higher than that of flight; therefore efficiency is increased in comparison with ordinary flaps. In this case arrangements of engines and flaps must be correlated between themselves.

Airflow of flaps by the exhaust engine jet (Fig. 6.23).

In this case the relation of engines and flaps is necessary.

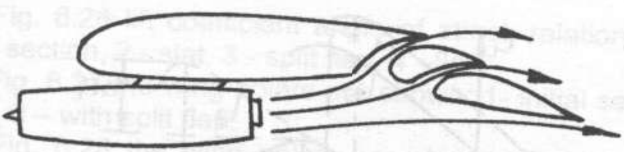

Fig. 6.23. Airflow of flaps by the exhaust engine jet

In addition, suitable materials are necessary for flaps.

Flap with boundary layer blowing (Fig. 6.24).

Here lift increment may be obtained almost two times in comparison with an ordinary flap.

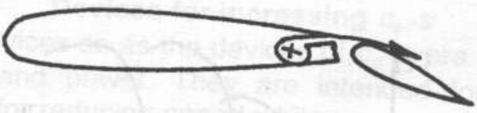

Fig. 6.24. Flap with boundary layer blowing

Circulation control system (Fig. 6.25).

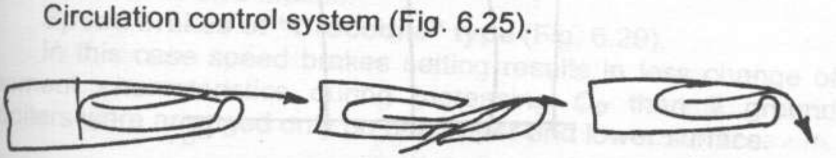

Fig. 6.25. Circulation control

This system allows changing the wing trailing edge configuration with simultaneous air blowing. The change of the air blow direction changes the wing blow pattern. In this case, of course, its aerodynamic characteristics are changed.

Aerodynamic characteristics of wings during using the high-lift devices

In Fig. 6.26-6.28 characteristics of $c_L - \alpha$ and $c_L - c_D$ are given with using different high-lift devices.

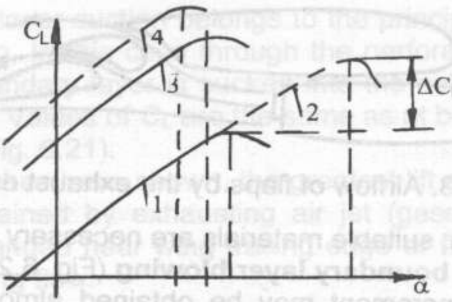

Fig. 6.26. High-lift devices influences on a lift coefficient and stall angle

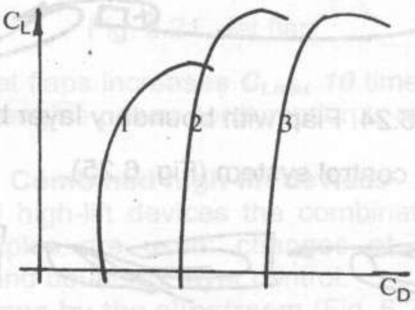

Fig. 6.27. High-lift devices influences on a wing polar

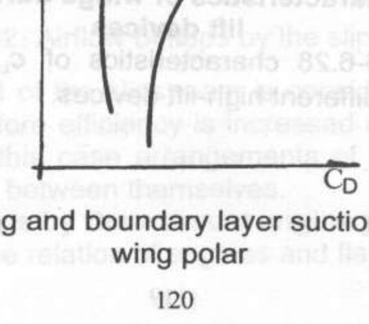

Fig. 6.28. Blowing and boundary layer suction influence on a wing polar

In Fig. 6.26 lift coefficient angle of attack relation is given: 1 - initial section, 2 - slat, 3 - split flap, 4 - flap.

In Fig. 6.27 the wing polars are shown: 1- initial section, 2 – with flap, 3 – with split flap.

In Fig. 6.28 the wing polars are shown: 1 - initial section, 2 - with boundary layer suction.

It follows from above characteristics that the lift-flaps and flaps during increasing C_L reduce α_{cr}, while the slats increase both. Boundary layer control systems increase value of C_L without increasing C_D, while aerodynamic high-lift devices shift the polar to the right.

Devices for increasing $c_D \cdot S$

These devices so as the devices of $c_D \cdot S$ are subdivided into aerodynamic and power. They are intended for reducing the diving speed, for reducing speed while maneuvering and also for shortening the landing run after landing. These devices are called speed brakes or dive brakes.

Speed brakes of “Crocodile” type (Fig. 6.29).

In this case speed brakes setting results in less change of moment characteristics during increasing C_D than if ground spoilers were arranged only on one upper and lower surface.

Fig. 6.29. Speed brakes of "crocodile" type

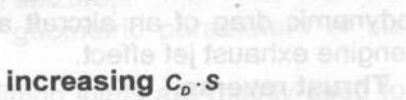

Fig. 6.30. Deflected speed brakes

In addition, aerodynamic forces acting on upper and lower speed brakes give hinge moments of opposite sign, in this connection light force is required for speed brakes setting.

Deflected speed brakes (Fig. 6.30).

The operational principle of such a brake lift flap is seen in the figure.

Flap-speed brakes (Fig. 6.31).

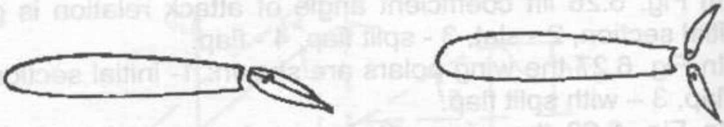

Fig. 6.31. Flap-speed brakes

During take-off and landing it operates as an ordinary flap. After landing – as speed brakes .

Drag parachute.

It is extended after landing. It abruptly increases aerodynamic drag of an aircraft and requires protection against the engine exhaust jet effect.

Thrust reverse.

In this case the special devices are used on the engine output channel. These devices direct the engine thrust vector to opposite side and abruptly shorten the landing run.

In this case exclusion of hit probability of hot gases on unprotected surfaces (wing, fuselage, tail unit, landing gear) must be foreseen.

Possible devices for braking at landing run are shown in Fig. 6.32.

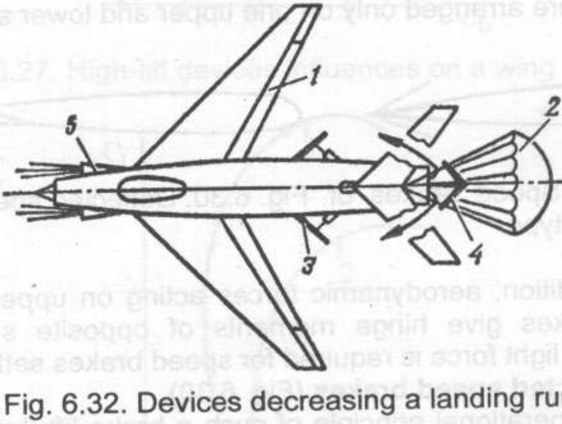

Fig. 6.32. Devices decreasing a landing run

Here: 1 – flaps (speed brakes) of wing, 2 - drag parachute, 3 - speed brakes of fuselage, 4 - thrust reverse, 5 - brake rockets.

The hinge fitting of high-lift devices

High-lift devices are attached to the wing primary structures: at the leading edge section – to the front spar or front false spar, at wing trailing edge section – to the rear spar or rear false spar.

The supporting (reinforced) ribs must be mounted in the places of arranging the hinge fitting joints of the retraction – extension mechanisms both on the wing and on the high-lift devices.

Requirements to the high-lift devices hinge fitting:
- smoothness of motion at extension and retraction;
- motion must be without seizure;
- exact maintenance of geometric parameters of slats in extended position.

Now two types of hinge fitting joints are mainly used for the high-lift devices of the wing leading edge:
- rotation about the bracket;
- guide tracks with carriages.

In this case the track may be attached to the wing and then the carriage belongs to the high-lift device. If the carriage is arranged on the wing, then the track is on the high-lift device. The track attachment on the wing is more often used.

In the first case the advantage is lower mass of the hinge fitting joints. The disadvantage is necessity to take the hinge fitting joints into the flow. It results in increasing the aerodynamic drag. To reduce drag the fairings must be used into which the brackets are placed.

In the case of using the tracks with carriage the aerodynamic drag will be less, so they are inside the wing and the high-lift device. But the weight here will be considerably higher, even if the fairings are not required.

In addition to the above-mentioned, the wing high-lift devices are also hanged on the link gears. Turning the link gears causes the slat deflection to either side. In this case the link gear does not go out into the flow.

For providing high effectiveness of the high-lift devices on the wing trailing edge of the swept wing the so-called cone extension is applied. The task of such extension is to arrange a lift flap or a flap in extended position to the perpendicular position relative to the flow so nearer as possible. For this purpose the wing root portion of the high-lift device is extended out of the wing further than the end line one.

There are two ways of getting such extension in the case of using the tracks with carriages:

- screw guide tracks;
- tracks of different radius of curvature (in the root section the radius is greater)

Devices of improving the stall characteristics

As we already know, on swept wings the flow velocity vector may be resolved into two components – cross-stream and longitudinal. It was already noted that longitudinal component causes building up the thickness of boundary layer on the wing ends. It will result in the earlier stall in these areas in comparison with the wing root portion. The stall in the area of the aileron location results in reducing the effectiveness of roll control, lateral imbalance and on swept wings the mistrim too. The stall on the wing ends causes the positive pitching moment appearance, reaching higher angles of attack and breakdown of flow on the whole wing.

For preventing the stall some devices must be provided, the requirement to which may be drawn up in advance:

- attached flow throughout flying angle-of-attack range;
- creation of negative pitching moment if the stall occurred;
- synchronism of device operation on both outer wings;
- smooth change of stability characteristics at high angles of attack.
- minimum drag in non-operated state.

The ways of improving the stall characteristics are:

- geometric wing twist, in this case the setting angle of attack (ref. above) in the wing tip portion is less than in the root one. Therefore the stall will occur earlier in the root portion. This causes the negative pitching moment and the ailerons will keep their effectiveness;
- aerodynamic wing twist at which the airfoils are used in the wing tip portion, which have the increased values of stall angle α_{st}. Therefore, the stall will occur earlier in the wing root again;

– aerodynamic fences, which are arranged, as a rule, on the upper wing section in parallels to the flow. They divide longitudinal velocity component into areas, in boundaries of which the boundary layer thickness is slightly increased, and turn the longitudinal flow in the direction of the main one;

– profiling the slots, vortex generators, bends on the wing leading edge, which generate powerful vortexes along the wing chord. These vortexes operate as aerodynamic fences;

– arrangement of extensions in the wing leading edge section in the area of ailerons, which change the wing section by increasing α_{st};

– application of wing-tip slats. In this case the slats are arranged only in the aileron area, they are deflected at high angles of attack (Fig. 6.33). The slat deflection increases α_{st}, as we already know;

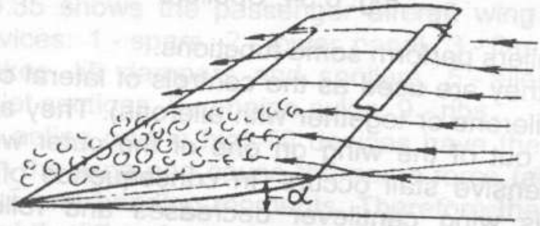

Fig. 6.33. A tip slat

– sweep forward. In this case the longitudinal flow component will be directed not to the wing tip but to its wing root with all positive consequences.

But the swept-forward wings have very low characteristics of divergence (one kind of aeroelasticity). Therefore such wings were not used till now. Only applying the composite materials in the wing structures gives possibility to eliminate stated disadvantage. That gave a chance to begin using the wings with sweep forward.

– application of lift dampers. The lift dampers are arranged in wing root or inner wing and are deflected (automatically or by pilot) in the case when aircraft reaches high angles of attack. It results in the stall on the upper section and therefore to decreasing lift and angle of attack. Lift dumpers are also deflected after aircraft landing to prevent so-called "bouncing" - spontaneous periodic take-off when landing.

Sometimes the spoilers are used on aircraft. The spoiler is a flat-panel on the upper wing surface in its outboard portion (to aileron), which is arranged nearer to the rear portion of the profile.

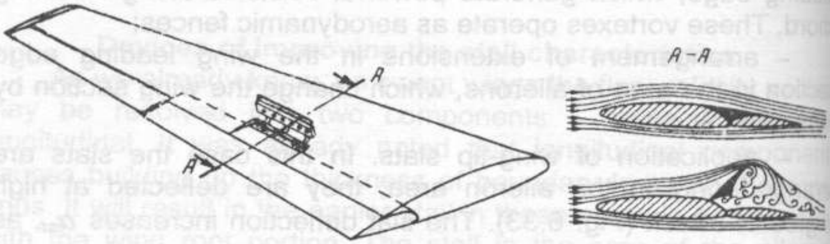

Fig. 6.34. Spoilers

The spoilers perform some functions.

Firstly, they are used as the controls of lateral controllability (instead of ailerons or together with ailerons). They are deflected or extended out of the wing on one of the outer wings. In this case the intensive stall occurs. In consequence of this the lift force on this wing cantilever decreases and rolling moment occurs. But in consequence of considerable stall delay the spoilers are used as independent controls only on military aircraft. They are usually used together with ailerons.

Secondly, they perform the role of the air brakes to improve maneuverability in flight with simultaneous deflection of spoilers on both wing cantilevers.

Thirdly, simultaneous deflection of spoilers during landing results in reducing C_L and increasing C_D, that decreases probability of aircraft "bouncing" after aircraft landing and shortens the landing run.

In non-operated state the spoilers are sunk within the wing contour.

It should be noted that aircraft reaching high angles of attack might cause very dangerous phenomenon – spin, because of which hundreds of aircraft got into air crash. And if these aircraft were empty…

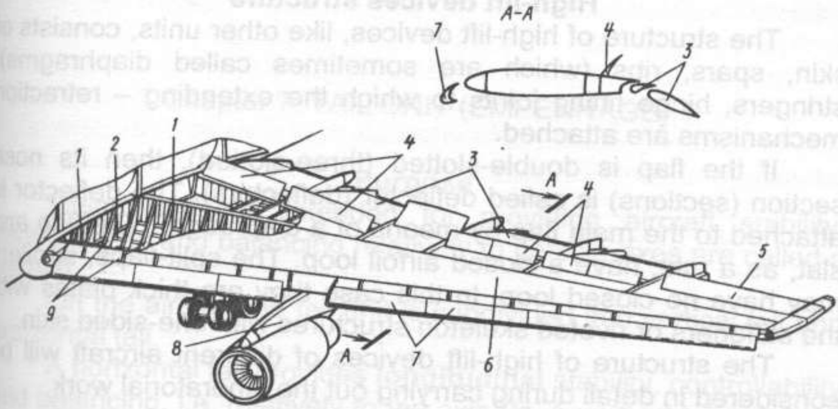

Fig. 6.35.Wing high-lift devices

Fig. 6.35 shows the passenger aircraft wing with different high-lift devices: 1 - spars, 2 - lower panel, 3 - flap sections, 4 – speed brakes, lift dampers and spoilers, 5 - aileron, 6 - upper panel, 7 - slat sections, 8 - engine pylon, 9 - ribs.

Loads acting on the high-lift devices have the same nature as those on the wing and cause the same force factors – lateral force, torque and bending moments. Therefore their structure in principle slightly differs from that of the wing itself.

Design configuration is a thin-walled beam, the supports of which are hinge fittings to the wing. All profiled units (flaps, slats) have longitudinal and transverse framework and the skin that forms a closed loop. Such a structure, similar to that of the wing, takes up external loads by the same primary members – spar, ribs, stringers, and skin.

The same high-lift devices as split-flaps, speed brakes, spoilers, lift dampers may have no closed loop, which takes up torsion. In this case they are plates having reinforcement by longitudinal and transverse members from one side (that one, which in inoperative condition is inside the wing).

The general distinctive feature of all high-lift devices is the availability of hinge fitting and controls, which provide the simple turning (deflection) or turning with moving out.

High-lift devices structure

The structure of high-lift devices, like other units, consists of skin, spars, ribs (which are sometimes called diaphragms), stringers, hinge fitting joints to which the extending – retraction mechanisms are attached.

If the flap is double-slotted (three-slotted), then its nose section (sections) is called deflector (deflectors). The deflector is attached to the main flap by means of a diaphragm. The flap and slat, as a rule, have a closed airfoil loop. The split-flaps, spoilers may have no closed loop. In this case they are thick plates with the stiffeners or riveted skeleton structures with one-sided skin.

The structure of high-lift devices of different aircraft will be considered in detail during carrying out the laboratorial work.

Chapter 7. TAIL UNIT (EMPENNAGE)

Purpose

Lifting surfaces intended for providing aircraft stability, controllability and balancing relatively to definite axes are called a tail unit.

On the aircraft the tail unit is subdivided into vertical tail and horizontal tail.

A horizontal tail provides **longitudinal** stability, controllability and balancing, i.e. relatively to the axis ***0z***. A vertical tail provides **directional** stability, controllability and balancing relatively to the axis ***0y***.

Relative to the axis ***0x***, as already stated, these characteristics are provided by the wings with the ailerons.

The aircraft of normal (classic) aerodynamic configuration and "canard" configuration have horizontal and vertical tail. Aircraft of "tailless" type and "flying wing" have only vertical tail.

Requirements

Aerodynamic, strength, stiffness, weight, technological, operational and other general requirements to a great extend belong to a tail unit:

- strength: obtaining the least weight of a tail unit while satisfying strength conditions and rigidity requirements, reducing forces and moments acting on the fuselage from a tail unit;
- technological: possibility of manufacturing at least expenses during least possible production cycle;
- operational: providing inspection and checking all primary assemblies, simplicity of installation-removal, operational reliability, simplicity of installing the control surfaces with providing interchangeability.

Specific requirements to a tail unit are:

- aircraft stability, controllability and balancing must be provided relatively to all three axes. Controllability characteristics are control surface effectiveness and margin. Effectiveness is the value of moment or angular velocity corresponding to the control surface deflection by 1°. Control surface margin is a structurally-possible control surface deflection-angles ratio, the angles being necessary for balancing. Quantitative characteristics of aircraft controllability is its maneuvering. It is expressed by the time necessary to perform completed curvilinear changes, the path of which is specified;

- aerodynamic requirements are to provide minimum of C_D;
- to provide longitudinal and directional stability and controllability at all flight conditions including conditions which approach critical (landing, spin);
- minimum hinge moments on control surfaces;
- less tail blanketing by the wing as possible, fuselage, engine nacelles and by one tail part by another too;
- the later than on a wing initiation of shock stall (i.e. critical Mach number M^* of a tail unit must be greater than M^* of the wing), that provides maintaining the stability and controllability characteristics at transonic speeds;
- excluding the possibility of appearance of different vibration (including buffeting and flutter of the tail unit).

The outer shapes of the horizontal and vertical stabilizers resemble the wing and their geometrical characteristics (airfoils, plan forms, front view) are analogous.

A plan form of a **horizontal stabilizer** (HS) is analogous to those of the wing: tapered, swept, triangle. Rectangular shape is used rarely. Cross section shapes (airfoil) and front view are also similar to the wing characteristics.

Parameters, which characterize a tail unit plan form, as of the wing, are area S_{HS}, aspect ratio λ_{HS}, taper ratio η_{HS} and sweepback angle χ_{HS}.

Area of HS is determined according to the value of **static moment** A_{HS}.

$$A_{HS} = \frac{S_{HS} L_{HS}}{S b_A},$$

where S_{HS}, L_{HS} – area of HI and its arm, S, b_A – wing area and its mean aerodynamic chord (M.A.C.).

The arm L_{HS} is the distance from the center of aircraft mass to the point on the mean aerodynamic chord of the HS – on

$0.25\ b_{AHS}$ for subsonic aircraft and $0.5\ b_{AHS}$ for supersonic aircraft.

For modern aircraft $A_{HS} = 0.3 \ldots 1.0 \ldots$ Less values of A_{HS} correspond to light maneuverable aircraft but great values correspond to heavy non-maneuverable ones. For aircraft with straight wings and for heavy maneuverable ones with swept wings $L_{HS} = (2.0 \ldots 3.5)\ b_A$, and for supersonic non-maneuverable aircraft with delta and swept wings of low aspect ratio $L_{HS} = (1.2 \ldots 1.5)\ b_A$.

Usually the HS of aircraft consists of two sections – fixed **stabilizer** and movable tip section (**elevator**). The elevator area is within $S_E = (0.3 \ldots 0.4)\ S_{HS}$. Maximum elevator deflection angle is within $20 \ldots 35^\circ \ldots$

To meet requirements $M^*_{HS} > M^*_W$ a tail unit must have small airfoil thickness ratio, great sweep angle and small aspect ratio. On the HS symmetrical sections are often used, which give lower aerodynamic drag, greater value of M^*, less value of the elevator hinge moment. On heavy aircraft the asymmetrical sections are sometimes used, which are mounted with concavity downwards. In this case the balancing force required for horizontal flight is obtained at a low angle of attack (let's remind once more that the force on the HS is directed downwards). It results in drag reduction. On the Antonov-28 aircraft even a fixed slat is used, which is arranged on all the stabilizer leading edge. It maintains the HS effectiveness when the wing flaps are deflected to a limit angle.

A dihedral angle "Ψ" of the HS is more often equal to zero. And if it is only necessary to take out the HS from a shadow region by the wing or other unit, it is given a dihedral or anhedral angle "Ψ". The angle of setting for the HS is from $+2^\circ$ to -2°.

All-moving stabilizer

Reasons of application

In subsonic speed area the elevator is effective enough and provides controllability for aircraft.

On high-speed aircraft the elevator becomes of little effectiveness for two reasons.

Elevator effectiveness reduces during flight at supersonic speeds. At subsonic speeds the elevator deflection results in additional force not only due to the elevator itself, but as a result of pressure redistribution on all over the stabilizer (Fig. 7.1, a). At supersonic speeds a pressure change caused by the control-surface deflection does not leave a shock wave area 1 and, therefore does not reach the stabilizer (Fig. 7.1, b).

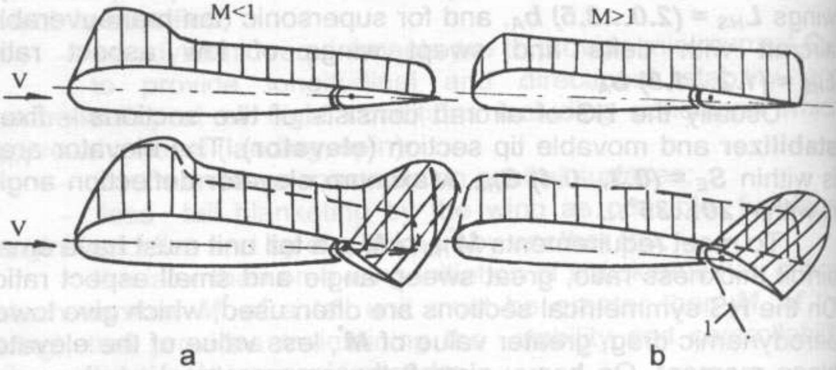

Fig. 7.1. Pressure distribution on the stabilizer: a – at subsonic speeds, b – at supersonic speeds

The **second reason** is that circumstance that with increasing flight speed an aircraft center of pressure displaces backward (Fig. 7.2).

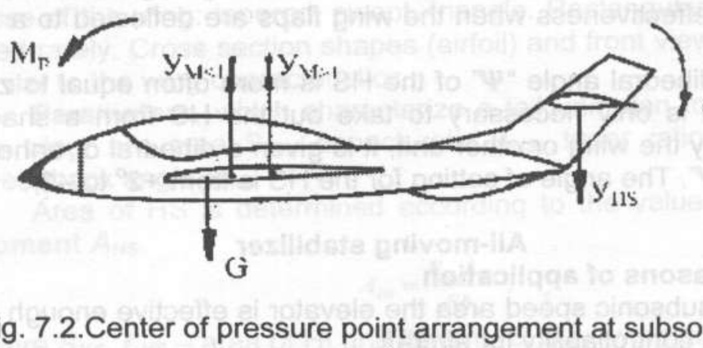

Fig. 7.2.Center of pressure point arrangement at subsonic and supersonic speeds

Applications of the all-moving stabilizer enabled to increase its effectiveness sharply at transonic and supersonic speeds, especially at high altitudes.

Load-carrying structure of AMHS

As a whole, two variants of the all-moving stabilizer hinge fitting configuration are used

- according to the shaft type (axle is rigidly tied with the stabilizer);
- according to the axle (axle is rigidly tied with the fuselage).

In the first variant an operating lever is attached on the shaft, which is the extension of a tail unit spar (Fig. 7.3,a). The shaft carries lateral force ***Q***, bending moment ***M_b*** and torque ***M_t***. Therefore it has to have closed cross sections. Bearings are arranged on fuselage frames.

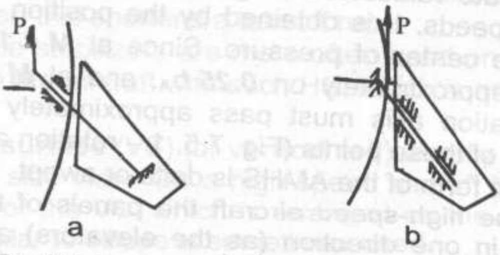

Fig. 7.3. Stabilizers: a – shaft scheme, b – axis scheme

In the second variant an operating lever is attached to the stabilizer itself (Fig. 7.3, b). The bearings are arranged on it too. This complicates their operation because of insufficient overall dimensions of the section. The axle carries ***Q***, and ***M_b***, but not for ***M_t***. This considerably reduces its weight.

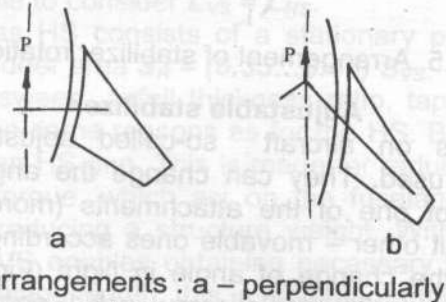

Fig. 7.4.Spar arrangements : a – perpendicularly fuselage axes, b – on generatrix

The rotation axis of an all-moving stabilizer may be perpendicular to an aircraft plane of symmetry (Fig. 7.4, a) or at angle (Fig. 7.4, b). Each of these variants has their advantages and disadvantages.

In the first variant it is structurally simpler to carry out control since the shaft is of a solid type, i.e. advantageous in mass ration. But here because of irregularity of an aerodynamic balance spanwise considerable torques M_t appear and load-carrying structure is more complex. It occurs because the axis does not pass in all sections near maximum thickness of the airfoil. In the second variant all is vice versa.

Position of the rotation axis in a airfoil section is determined by the moderate values of a hinge moment both at subsonic and supersonic speeds. It is obtained by the position of the rotation axis near the center of pressure. Since at $M < 1$ the center of pressure is approximately on $0.25\, b_A$, and at $M > 1$ on $0.5\, b_A$, then the rotation axis must pass approximately in the middle between two of these points (Fig. 7.5, 1 – rotation axis).

The plan form of the AMHS is delta or swept.

On some high-speed aircraft the panels of the AMHS can deflect both in one direction (as the elevators) and in different ones (as ailerons). Such stabilizers are called **differential**. If required, they assist the ailerons and even operate instead of them.

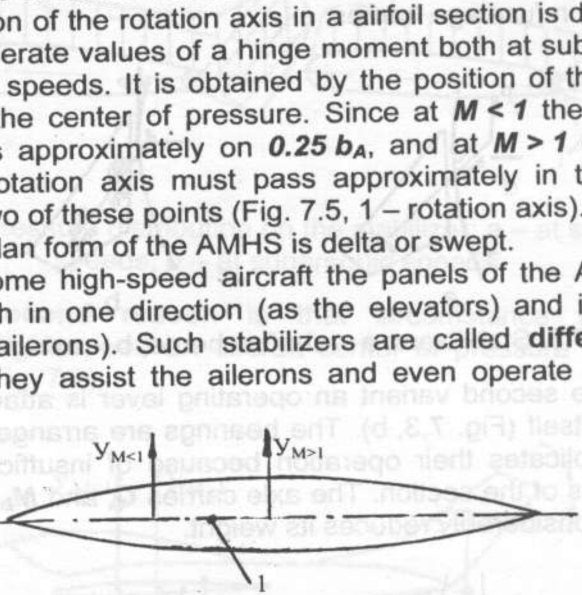

Fig. 7.5. Arrangement of stabilizer rotation axis

Adjustable stabilizer

Sometimes on aircraft so-called adjustable (movable) stabilizers are used. They can change the angle of setting in flight. Fittings of one of the attachments (more often aft) are made hinge, but other – movable ones according to the vertical. This provides the change of angle in flight (Fig. 7.6). Movable fitting is connected with special screw-jack 1, operated by a pilot.

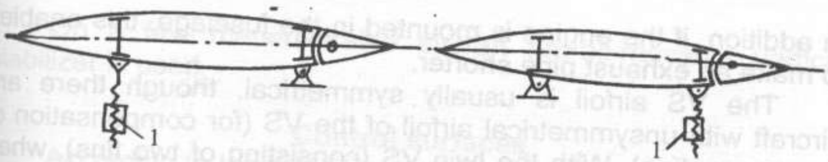

Fig. 7.6. Adjustable stabilizer

Such structure of the HS performs two main functions. First, it enables to perform a longitudinal trim (relative to the axis 0_z), which was unbalanced due to any reason. Of course, it may be recovered by means of the elevator, but in this case the drag shall be increased and, in addition, the elevator horn must be kept all the time in deflected position. Secondly, at aircraft takeoff an adjustable stabilizer assists to raise a nose gear off the runway quicker, this shortens a takeoff run.

Adjustable stabilizers are more often used on "T"-shape tail unit. But there are aircraft with such HS, which is arranged on the fuselage.

Vertical surface (VS) (or **vertical tail**) usually has a tapered shape from a side view. On a high-speed aircraft the sweptback VS is used. For the VS, which is arranged on the HS (twin VS), the shape similar to ellipse is sometimes used.

Static moment value of the VS has analogous structure

$$A_{VS} = \frac{S_{VS} L_{VS}}{S \cdot l},$$

where S_{VS} – VS area, L_{VS} – VS arm (is determined by analogy with L_{HS}), S, l – wing area and span.

For aircraft with straight wing $A_{VS} = 0.04...0.06$, for high-speed aircraft with swept and delta wing $A_{VS} = 0.06...0.15$, with that it is possible to consider $L_{VS} = L_{HS}$.

The VS as HS consists of a stationary part (**fin**) and the **rudder**. The rudder area $S_R = (0.35...0.45)\, S_{VS}$.

Value of sweep, airfoil thickness ratio, taper is determined according to the same reasons as for the HS. But the VS aspect ratio is less than HS one. This is made for reducing of a bending moment and torque, which act on the fuselage from VS, and, therefore, for reducing a structure weight. With "T"-tail unit the sweep of the VS enables obtaining necessary value of L_{VS} and L_{HS} at less fuselage length, this is advantageously in weight ratio.

In addition, if the engine is mounted in the fuselage, this enables to make an exhaust pipe shorter.

The VS airfoil is usually symmetrical, though there are aircraft with unsymmetrical airfoil of the VS (for compensation of torque reaction). With the twin VS (consisting of two fins), when its surfaces are arranged in the flow from propeller, section may also be unsymmetrical. Here the concavity must be turned to the fuselage. In this case in flight with one engine failed a turning moment will be less.

Sometimes for increasing VS effectiveness in flight at high angles of attack so-called **dorsal fins** are used. There are original gloves in the root part of the VS. They perform their functions due to the flow passing around the fuselage at an angle to it.

Application of so-called **false keels** (ventral fins) is especially effective. They reduce torque to the fuselage without reducing effectiveness of the VS, operate at high angles of attack, prevent cross overflows of flow in rear fuselage which can cause its vibration, and at the same time they are the fairings for aerials of radiosystem. Sometimes the role of false keels is performed by a lowered horizontal stabilizer panels, which are mounted at a high anhedral angle ("**Ψ**").

On some aircraft a twin vertical tail (**twin-stabilizer vertical tail**) is used. In this case the fins are taken out of an air shadow area of the fuselage. They may be attached on the HS tips, on the wing (for "tailless" configuration), on rear fuselage sides. Sometimes on supersonic maneuverable aircraft twin vertical tails have a camber from the outside of the fuselage, and sometimes to its center. In the first case at high angles of attack they leave an air shadow of the fuselage keeping effectiveness under such flight conditions. In the second case an aircraft radio reflectivity is reduced.

On heavy transport aircraft a twin VS reduces the load on the rear fuselage where large cutouts are made for loading-unloading (for example, the Antonov-22, Antonov-225 aircraft). Each fin of a twin VS must be arranged in an air flow, which is thrown by the propellers. That increases the VS effectiveness, especially when one of the engines failed (for example, Antonov-28 aircraft).

On a few maneuverable aircraft an all-movable vertical stabilizer is used.

Control surfaces

According to the principle of operation, loading and structure the control surfaces of horizontal and vertical tail are analogous to the ailerons (ref. above). The difference in design is to take into account the compliance of the supports. This is due to rigidity of the system "control surface – tail unit" are comparable between them. In the system "aileron-wing" the wing rigidity is much higher.

Table 7.1. Horizontal tail parameters

Type of aircraft	$\overline{S}_{HS}$	$\overline{S}_{E}$	η_{HS}	λ_{HS}	χ_{HS}	$\overline{C}_{HS}$
M<0.6	0.15-0.20	0.35-0.45	1.0-3.0	3.0-5.0	0°-5°	0.08-0.1
M>0.8	0.20-0.30	0.30-0.40	2.0-3.0	1.5-3.0	30°-40°	0.04-0.06

The kinds of hinge moment balance, mass balance on the control surfaces are the same as on the ailerons (with the exception of inner aerodynamic one).

Statistical data of the main parameters of the horizontal and vertical tails in tables 7.1 and 7.2 are given .

Table 7.2. Vertical tail parameters

Type of aircraft	$\overline{S}_{VS}$	$\overline{S}_{R}$	η_{VS}	λ_{VS}	χ_{VS}	$\overline{C}_{VS}$
M<0.6	0.08-0.12	0.35-0.45	2.0-2.5	1.5-3.0	0°-25°	0.06-0.08
M>0.8	0.15-0.2	0.20-0.30	1.5-3.0	1.0-2.0	35°-45°	0.04-0.06

Loads on the tail units

The tail unit loads are distributed as aerodynamic and mass forces. Their spanwise and chordwise distribution depends on flight conditions. Mass forces are comparatively slight and they may be ignored. Aerodynamic loads on the tail unit are determined in accordance with design conditions of strength standards.

Loads on the horizontal tail may be divided into:

- balancing P^E_{HS};
- maneuvering P^E_M;
- during flight in restless (turbulent) atmosphere P^E_W.

Balancing loads are determined from the moment equality conditions relative to aircraft axis **Oz** with horizontal tail M_{zHS} and without it M'_{zHS} (Fig. 7.7).

$$M_{zHS} = M'_{zHS}.$$

Hence it appears that operational load on the horizontal tail:

$$P^E_{HS} = m'_z \frac{S \cdot b_a}{L_{HS}} \cdot \frac{\rho_H V^2}{2},$$

where m'_z - moment coefficient of the aircraft aerodynamic forces without horizontal tail. It is determined according to test materials of the aircraft model without horizontal tail in wind tunnels under the most unfavourable loading centering and Mach number; b_A – mean aerodynamic wing chord; S – wing area; ρ_H – air density at altitude H; V – flight speed.

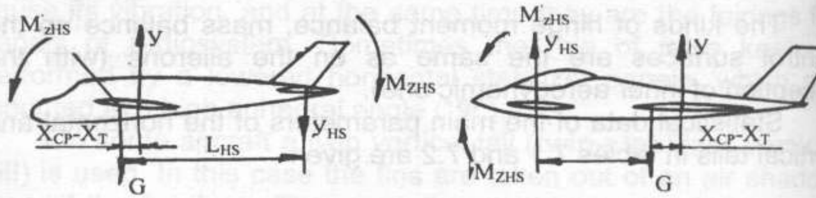

Fig. 7.7. Balancing moments

The account of maneuvering load on the tail unit according to the strength standards (AR) is reduced to two conditions.

In the first condition the maneuvering load is determined as amount of balancing load P^E_{HS} and proper maneuvering load ΔP_M:

$$P_M = P^E_{HS} + \Delta P_M,$$
$$\Delta P_M = k_1 n^E_{max} (G/S)\, S_{HS},$$

where — k_1 coefficient which is given by the strength standards; n^E_{max} — maximum operational g-load, (**G/S**) — wing specific load; S_{HS} — HS area.

The loads during aircraft flight in a restless air is determined according to:

$$P^E_W = P^E_{HS} \pm P_W,$$

P^{E}_{HS} - balancing load on the tail unit in horizontal flight at speed V

$$P_w = 0.05 \cdot C^{a}_{yHS} \cdot V \cdot W \cdot S_{HS} \ ,$$

where W — effective equivalent velocity of vertical gust.

At speed, equal or lower V^{E}_{max}

- at $H \leq 10{,}000$ m

$W = \dfrac{15V^{E}_{max}}{V}$, but not more than **20** m/sec;

- at $H \geq 20{,}000$ м

$W = \dfrac{10V^{E}_{max}}{V}$, but not more than **12** m/sec.

At $H > 10{,}000$ m and $H < 20{,}000$ m the linear interpolation should be used.

The vertical tail loads are determined by the same way.

The stabilizer consisting of two halves and the fin are cantilever beams, and the one-piece stabilizer is the double-support beam with cantilevers. Because of these loads the shearing force Q, bending moment M_b and torque M_t appear in the load-carrying members of the stabilizer and fin. They are loaded with distributed aerodynamic load and concentrated forces from controls.

Tail unit layout

The tail unit effectiveness in a considerable extent depends on its layout on the aircraft. It is desirable that the tail unit might not be in the area of the airflow stopped and excited by the wing, engine nacelles, fuselage or other parts of the aircraft under all flight conditions.

While arranging the HS great importance is paid to its proper arrangement according to the height relative to the wing. The HS must be arranged out of the airflow wake, which leaves the wing and has the wash and severe turbulence. Wash and turbulence reduce the HS effectiveness.

They increase the probability of shaking emergence of the HS. While the HS being arranged on the VS, the probability of shaking emergence is reduced. And when the shock waves emerge on the wing, the tail unit is out of the stagnant flow area. The "T"-tail unit is also used on the aircraft with engines in the rear fuselage. But such arrangement increases the weight of the tail unit itself and the fuselage because of increasing loads.

While choosing the place for the HS, the necessary remoteness from engine exhaust jets must be provided. Relative arrangement of the HS and VS must be such that one part of the tail unit shall not blanket the other in flight. Otherwise, anti-spin characteristics of the aircraft become worse. In the end, the problem of the tail unit arrangement on the aircraft and relative arrangement of its components is solved according to the wind tunnel tests and then flight ones.

In practice of aircraft construction a great number of layout configurations of vertical and horizontal units have been developed (Fig. 7.8).

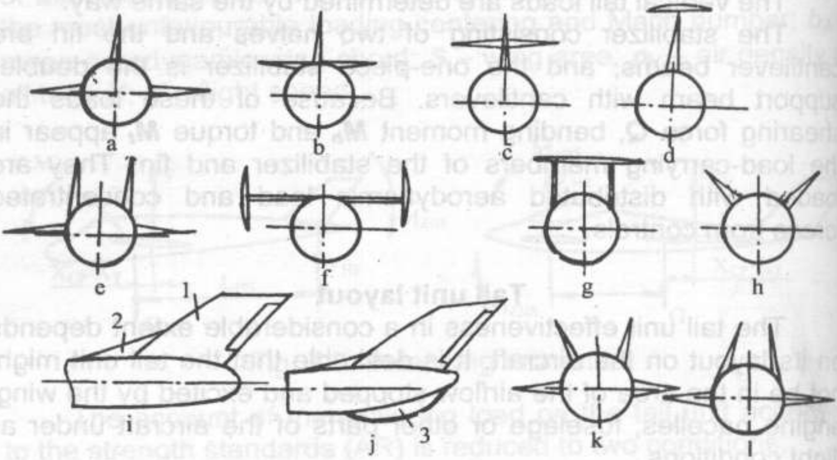

Fig. 7.8. Tail unit layout

Each of these structures has its advantages and disadvantages. The choice of layout depends on the aircraft type, its aerodynamic configuration, performance, operating conditions and so on. But there are general approaches while designing the tail unit. For example, relative arrangement of vertical and horizontal stabilizers must be such that in flight one part of the tail unit might blanket the other as less as possible. During aircraft flying at high angles of attack or with slipping the part of vertical stabilizer can enter the air shadow of the horizontal stabilizer. Such aircraft will have low anti-spin characteristics. Arranging the horizontal stabilizer in front, behind or on the very vertical tail can reduce the blanketing of the vertical stabilizer.

Fig. 7.9. Flow over of a fuselage at high angles of attack

During flight at high angles of attack the application of a dorsal fin 2 enables to increase the effectiveness of the vertical tail 1 (ref. Fig. 7.8, i). In this case the flow, flown past the fuselage at angle, effects and the dorsal fin increases the effective area of the vertical stabilizer (Fig. 7.9).

The application of a ventral fin 3 (under fuselage strake) enables the lower half-diameter of the fuselage to be acted and, hence, to reduce area and weight of the vertical tail itself. Reducing the vertical tail area reduces the torque Mt acting on the fuselage. Mt is reduced by that circumstance that the force on the ventral fin creates torque of the main fin part.

In addition, the ventral fins reduce cross overflows in the aft fuselage by reducing probability of emerging of dangerous fuselage oscillation and vibration.

Arrangement of the vertical tail on the horizontal one (ref. Fig. 7.8, f and g) increases the effectiveness of the last, since the vertical tail reduces probability of the overflow on the ends of the horizontal tail from the overpressure area into the under pressure one. And such a phenomenon occurs with the horizontal tail arranged on the vertical one (Fig. 7.8, c, d). In this case the vertical tail effectiveness is increased. Disadvantage of the horizontal tail arrangement on the vertical one and vice versa is the deterioration of their vibration characteristics and possible load increasing on the fuselage (especially with "T"-tail unit).

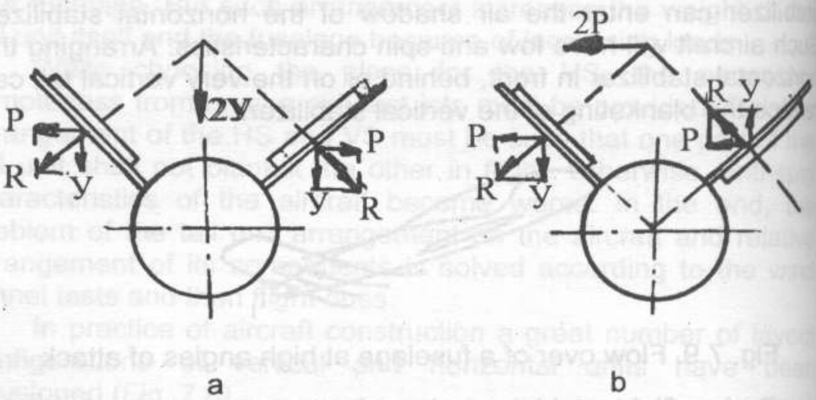

Fig. 7.10. "V"-shaped tail unit

There is also a **"V"-tail** unit among different tail unit configurations. Such a tail unit consists of two symmetrically arranged surfaces performing the tasks of the horizontal and vertical tails simultaneously, i.e. each of them has the stabilizing fixed parts and movable control surfaces. With both control surfaces deflected only up or down, they operate as the elevators (Fig. 7.10, a), and with control surfaces deflected to different sides, they operate as a rudder (Fig. 7.10, b).

However, in this case the ailerons must be deflected for counteracting the occurring rolling moment. In this case, considerable torques act on the fuselage, resulting in weight increasing its tail section.

In addition, when the same control surfaces are controlled from different command levers (as the elevator – from the stick, and as a rudder – from the pedals) that complicate the kinematics of the control circuit, makes difficulties in removing the back lashes in a control linkage. It is dangerous since it concerns vibration hazard of the tail unit of the flutter type.

The tail unit layout on the aircraft of the "tailless" type and "flying wing" has some features, since they have no HS. Hence, in these cases the elevator role is performed by the ailerons, which are differently called – elevons. The VS on such aircraft may be central and twin tail unit. It depends on the wing plan form. If the wing is swept, then the VS is made twin and is arranged on its tips. It increases the arm and reduces weight, correspondingly. If the wing is of delta shape, then the VS is most often central.

On the "canard" aircraft the HS is arranged in front of the wing, according to the structure it does not differ from the HS of the classic (conventional) aircraft. The "canard" VS has large dimensions due to the short arm to the center of mass and considerable disturbing moment of lengthened fuselage nose section. The structure also does not differ from the VS of the conventional aircraft configuration.

Tail unit structure

The tail unit parts are similar to the wing not only according to the outer shape. The load character and their operation are also analogous. Therefore they consist of the same elements as the wing. They have the same load-carrying structure: spar, torsion box and monoblock.

The longitudinal framework consists of spars, false spars, stringers, and the transversal framework consists of the ribs and, of course, the skin. The structure itself of these load-carrying members of the tail unit in the mainly does not differ from that of these elements in the wing.

As for structure the main parts of the tail unit – HS and VS – are not different between them either. The similar structures have both the rudders and elevators, and they are also analogous to the ailerons. The ways of reducing the hinge moment (except internal balance), trimmers, weight balancing, and attachment features on the main part are the same. Resulting from arrangement features the HS may consist of two detachable parts and may be one-piece. The VS may be also manufactured as a separate part and then can be attached to the fuselage and can be manufactured together with its tail part.

The fin and stabilizer are most often manufactured as two-spar and are attached to the main frames of the fuselage by means of the attachment fittings. The all-moving stabilizer usually has one spar to which the axle or shaft is attached which are joined to the primary structures of the fuselage.

Chapter 8. FUSELAGES OF AIRPLANES

A/V can have three types. Depending on type it is called: a *fuselage* - for overland planes, *a boat* - for seaplanes, *a gondola* - for planes with the case to which the tail units are not fastened. In this section we shall consider only fuselages.

Purpose

The fuselage of the plane unites basic units: a wing, tail units, the landing gear. The crew, passengers, useful loading, various devices and systems are placed in it. Frequently engines, fuel, arms are placed in a fuselage of combat planes .

There are some specific requirements to a fuselage too. Such as:

- sufficient strength, rigidity and survivability at a minimum probable mass;
- the form, the sizes and condition of a fuselage surface should provide the minimal aerodynamic drag (frontal drag of a fuselage makes 20…40 % of the general drag of an airplane). Overall dimensions of a fuselage should be small, and its shape - convenient for streamlining by an airflow. For the same purposes all members outstanding in a stream (a cockpit canopy, antennas of radio devices, etc.) should be whenever possible fitted to contour of a fuselage;
- the same factors should ensure minimum entry of heat inside from aerodynamic heating;
- convenient entry and an exit, convenient arrangement of crew and passengers;
- pressurization, heat and sound insulation for ensuring ordinary conditions to the crew and passengers;
- to ensure the normalized requirements on ventilation, heating and lighting;
- to ensure good review for the crew. This performance depends on the shape and sizes of the fuselage canopy;
- rational use of internal volumes;
- the layout of cargo compartments should ensure the

given center-of-gravity range;

– convenience of loading and unloading with a capability of mechanization of these operations;

– high technological effectiveness;

– presence of connectors for manufacture and transportation.

Exterior forms

The exterior forms of airplane fuselages are determined by their purpose, range of Mach numbers, arrangement of engines and other factors.

The cross section of a fuselage of an airplane can be rectangular, round, oval or combined (Fig. 8.1). Each of these shapes has the advantages and disadvantages.

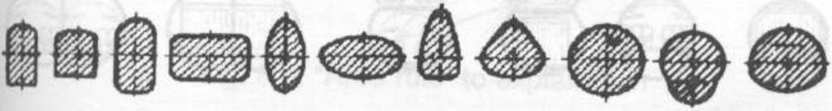

Fig. 8.1. Shapes of fuselage cross-sections

The round fuselage is the best aerodynamically, as at equal cross-sectional area has minimum perimeter, hence lower friction drag. The mass of such fuselage will be less too, as the load-bearing members (skin, frames) are placed around the perimeter. Such shape is expedient for pressurized compartments - from overpressure the skin will work only on a stretching. It perceives such loading well.

Advantages of a rectangular fuselage: simplicity of manufacturing, a capability of rational use of internal volumes.

Application of oval and more complicated shapes caused by aiming to reduce drag at rational use of internal volumes (Fig. 8.2).

In a side view of a fuselage its shape, as a rule, is asymmetrical. In a nose the cockpit of the pilot or crew is placed. In single-seat airplanes the cockpit canopy is designed as a deckhouse (superstructure). The height of a canopy should ensure the necessary view. Its outlines are established to obtain a minimum aerodynamic drag. On heavy airplanes the cockpit is enters into fuselage lines. On some heavy freight airplanes the fuselage section nose is hinged for convenient loadings-unloading.

The fuselage nose section of subsonic airplanes has the rounded shape (close to the shape of a drop). On supersonic – pointed, that causes the appearance of oblique shock waves. Such shock waves cause less aerodynamic drag. On hypersonic vehicles a fuselage section nose is combined – the rounded curvilinear cone allowing to receive acceptable drag at implemented conditions of a heat rejection. Otherwise, an acute cone in a fuselage section of hypersonic vehicles will be simply melt .

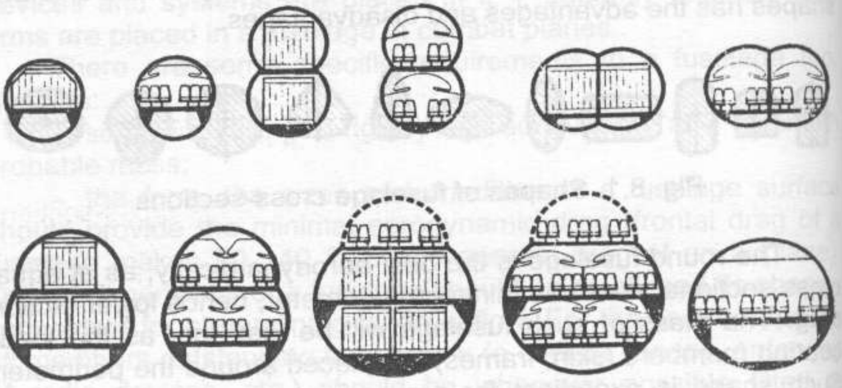

Fig. 8.2. Versions of fuselage layouts

The shape of a fuselage section tail of an airplane is determined by necessity of loading and unloading (for transport airplanes), and its outline – according to conditions of ensuring landing angle of attack at the most minimum height of a landing gear. For maneuverable airplanes the tail part should have low aerodynamic drag.

At the top view the fuselages of airplanes have the symmetrical shape.

Owing to a severe aerodynamic wing-fuselage interference a number of rules of the shape optimization is developed for different combinations of a fuselage with a wing.

At subsonic speeds the fillets, anxiliary structural items of vehicles with smooth lines, are applied and they are set in places of joining the units. In places the structural members protruding in a stream the similar functions are performed by the fairings.

For the joint place of a fuselage with a wing at trans- and supersonic speeds so-called "area rule" was found to be very effective. It is formulated as: the law of cross-section airfoil change about a centerline of a vehicle should correspond to that of a cross-section airfoil change of a body of the lowest aerodynamic drag.

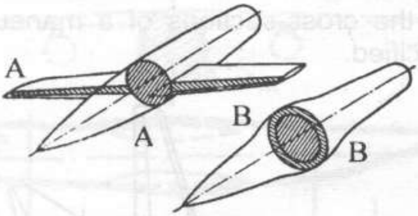

Fig. 8.3. "Area rule" to explanation

The theory prompts, that at set values of the cross-sectional size and length of body an axis symmetrical revolution one has the minimum wave drag. This body is the aerodynamic basis at the design of a fuselage with using an "area rule". For a combination "wing-fuselage" the "area rule" requires observing the conditions in each cross-section of vehicles the sum of the areas of a fuselage and wing falling in cross-section (A-A) should be equal to cross-section of a model body (B-B) (Fig. 8.3).

It is possible to achieve by reducing the fuselage cross-sections on joint areas with a wing. In this case in a fuselage in these areas the characteristic tapering is formed which can be seen on some airplanes (Fig. 8.4).

In practice "area rule" has two kinds of realization: integral and differential.

Integral is applied to subsonic vehicles and in this case the area of a fuselage decreases symmetrically from both sides.

With differential "area rule" a fuselage area on its top decreases more drastically than on bottom (almost trapezoidal form is obtained). This kind of "area rules" is applied to supersonic vehicles.

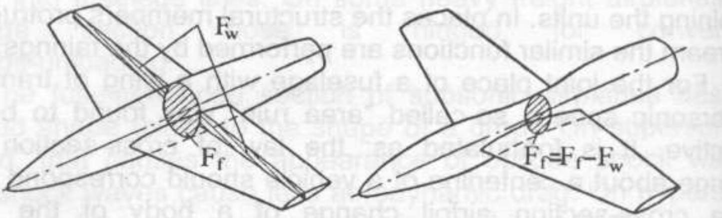

Fig. 8.4. Fuselage design with account for the "area rule"

In Fig. 8.5 the cross-sections of a maneuverable airplane fuselage are specified.

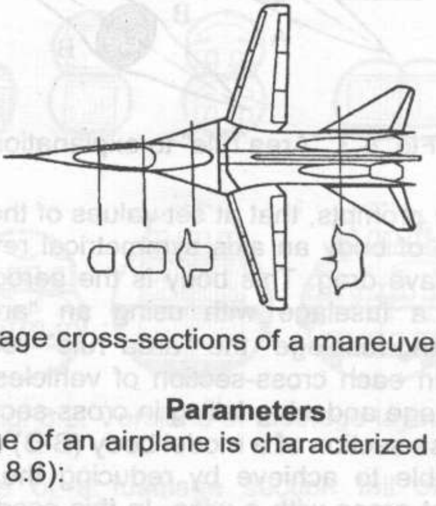

Fig. 8.5. Fuselage cross-sections of a maneuverable airplane

Parameters

The fuselage of an airplane is characterized by the following parameters (Fig. 8.6):

- length ***L***L_f;
- midship-section diameter (the largest on the area) D_f, or height ***H*** and width ***B*** of a midship-section;
- aspect ratio λ_f, which is determined for a round fuselage as

$$\lambda_f = \frac{L_f}{D_f};$$

for rectangular fuselage

$$\lambda_f = \frac{L_f}{2\sqrt{\dfrac{BH}{\pi}}};$$

and for the fuselage of the arbitrary shape

$$\lambda_f = \frac{L_f}{D_{fE}},$$

where D_{fE} – a diameter of a circle, equal-sized on the area to a midship-section of a fuselage of the arbitrary shape.

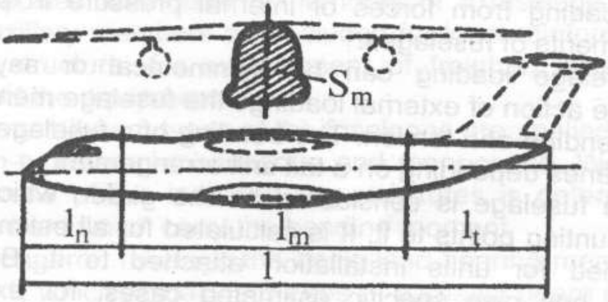

Fig. 8.6. Fuselage parameters

The aspect ratio of a fuselage has a great influence on its drag. The fuselage drag forms, as it is known, friction drag, pressure drag and wave drag. At subcritical speeds the friction drag makes the greater part of drag, which is proportional to area of a fuselage surface. Therefore the increase of a fuselage length at the constant area of midship-section (that is the increase λ_f) results in drag increase. On this basis the aspect ratio of non-fast airplanes should be within the limits ***4...8...***

At Mach numbers $M > M^*$ the main portion of drag is made by a wave drag. At increase of aspect ratio the wave drag decreases, therefore for supersonic airplanes $\lambda_f = 10...12$ is recommended.

Fuselage loading

The fuselage, as a well as the wing, is a heavy loaded part of an airplane too. All loads, which act on a fuselage in flight or during landing may be classified as follows:

– load from the joined parts — of a wing, tail unit, landing gear. They are usually concentrated. They act in mounting points in different zones of a fuselage;

– the mass forces from units, freights, which are located inside a fuselage. They can be both concentrated and distributed;

– the aerodynamic forces are distributed on all surface of a fuselage;

– the mass forces from own fuselage structure are distributed;

– loading from forces of internal pressure in pressurized compartments of fuselages.

Fuselage loading can be symmetrical or asymmetrical. Under the action of external loadings the fuselage members carry shear, bending and torsion. The bending of a fuselage can occur in two planes depending on a tail unit arrangement.

The fuselage is considered as the girder, which rests on wing mounting points to it. It is calculated for all estimated cases established for units installation attached to it. Besides the fuselage has own specific estimated cases, for example, for nosing-over. The value of g-load coefficients is set, as well as for a wing according to the AR.

The load-carrying structure

And now we shall consider the load-carrying structures of the fuselage, gondolas. They can be of truss and beam types too.

The fuselages of a truss type were widely applied in structures of vehicles, which flew at low speeds. They were designed as spatial trusses of rigid, rigid-braced and other types. The caps of trusses, strut, compression struts, and drag struts, wises and flexible straps were included in load-carrying members.

The bending moment is carried by caps, lateral force – by struts, compression struts and drag struts, torque – by the contour formed with four truss webs. As a skin canvas, plywood, thin sheet duralumin were applied. The skin is non-stressed in this case.

The main advantages of truss fuselages are the simplicity of manufacture, convenience of mounting, reviewing and repairing the equipment, which there is located. Disadvantages are bad aerodynamic shape, low stiffness, low service life, impossibility of full use of internal volumes for arrangement of freights. Now such load-carrying structures are seldom applied .

More often beam fuselages are applied. They represent thin-walled hollow beams, which have more or less massive stressed skin and also longitudinal and transversal primary structures. Depending on a kind of the load-carrying structure of a fuselage the longitudinal framework can consist of longerons and stringers (or without them), and transverse – frames. Except for the specified load-bearing members of a fuselage structure various auxiliary members are included for local reinforcement of the basic structure, for arrangement of freights, fastening the devices and the equipment.

Three main beam types of the fuselages are applied, such as - longeron-type, semi-monocoque and monocoque. We remind, that the name of the load-carrying structures is determined by those members which carry the bending moment.

In a longeron fuselage the basic load-bearing members are longerons 1, which actually are caps of a spatial beam (Fig. 8.7). They carry all bending moment (if to speak more exactly, then two bending moments – one from a horizontal tail, the second – from vertical one).

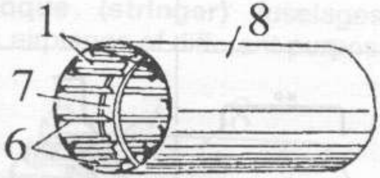

Fig. 8.7. Longeron-type fuselage

Therefore they are to be mounted not less than four. The wing spars are the supports for the fuselage longerons (rather than the reverse), where they are attached directly or through strong frames. Axial of compression and tensile forces occur in longeron, that is they operate similarly to caps of a wing spar.

The stringers 6 are in a longeron fuselage. They serve for a reinforcement of a skin 8, edging of cut-outs, attachment of equipment components. Fuselage stringers design is similar to one of a wing and a tail unit. Distance between them depends on a thickness of fuselage skin and makes ***80...250*** mm. The sizes of stringers cross section change both on contour perimeter and along a fuselage. It depends on value and character of loading.

Normal frames (similary to wing or the tail unit ribs) give the fuselage shape and reinforce a skin. The cross-section of frames can be channel section, Z-section, T-section (Fig. 8.8).

The **strong (reinforced) frames** 7 (Fig. 8.7) make the basis of a fuselage and serve for perception of both transfer of concentrated forces and moments on a skin and longitudinal framework. They are placed in attachment points of wings to a fuselage, of tail unit, landing gear, power-plant units, and in places of fuselage connectors also. The strong frames can consist of separate section and sheet members, or be manufactured as monolithic curvilinear beams. Frame spacing is ***200...600*** mm.

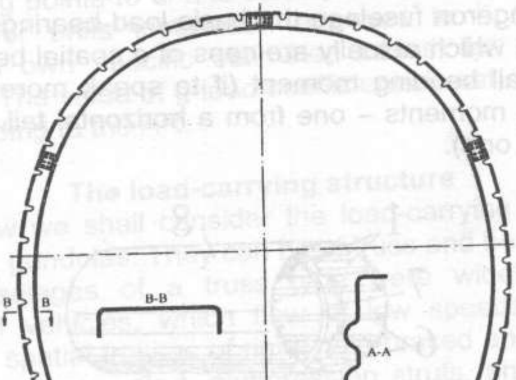

Fig. 8.8. Frame

The skin of longeron-type fuselage, except for providing convenient streamlining carries the torque moment, and lateral force. The separate skin panels are obligatory interconnect on a rigid members – stringers, frames. Joint can be either butt or lap.

The longerons in a fuselage can be located by two ways (we shall consider in detail) Fig. 8.9.

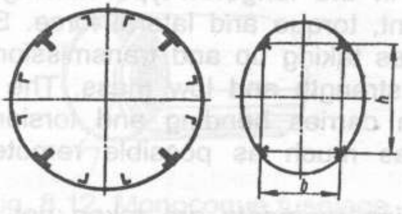

Fig. 8.9. Longerons in a fuselage

The longeron load-bearing structure of fuselages is frequently applied for airplanes, in which the engines are located in a tail section of a fuselage. In a fuselage of such structure it is convenient to arrange mounting points of engines, to make a great number of cut-outs (on segments between longerons) for arrangement of a cockpit, landing gear wells, weapon loading, containers of fuel tanks without disturbing integrity of the main load-bearing members.

Semi-monocoque (stringer) fuselages are the most popular on modern airplanes of different purposes (Fig. 8.10).

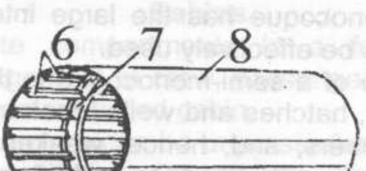

Fig. 8.10. Semi-monocoque fuselage

They are manufactured as a stiffened thin-walled shell. The longitudinal primary structure consists of densely located (spacing ***80…250*** mm) load-bearing stringers 6. The stringers stiffening a skin 8 together with it carry all bending moments. That is, in the semi-monocoque load-bearing structure the bending moment is carried by fuselage panels. Thus, in a skin of a semi-monocoque fuselage not only shearing stresses τ occur (as in a skin of the longeron-type fuselage) but normal stresses σ too. The transverse framework as well as in a longeron-type fuselage consists of normal and load-bearing frames 7. A skin is stronger, than in the longeron-type fuselage. It takes up the bending moment, torque and lateral force. Such structure of a fuselage ensures taking up and transmission of all loads at its high stiffness, strength and low mass. The reason is that the material, which carries bending and torsion stress (skin and stringers), is as much as possible remote from a fuselage centerline.

The bending moments are taken not by whole fuselage contour but by so-called vaults (we shall consider in detail) (Fig. 8.11) :

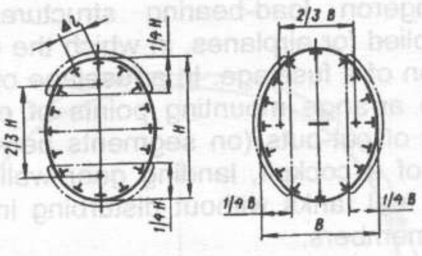

Fig. 8.11. Vaults of fuselage

The semi-monocoque has the large internal free volumes and allows them to be effectively used.

Disadvantage of a semi-monocoque is that the cut-outs for doors, illuminators, hatches and wells break integrity of the basic load-bearing members, and, hence, weaken the structure. For reinforcing cut-outs on their edges a thicker skin is used. The beams, reinforced stringers and frames, carriages and others are placed. If cut-outs are small, they may be edged with rings or flanges.

Monocoque (skin) fuselage is a skin-shell 8, which is stiffened only with transverse members – frames 7 (Fig. 8.12). Longitudinal stiffening members are only local. The skin carries all external load-bearing factors – bending and torque moments, lateral force. Therefore there are both σ and τ in it. The fuselage strength in compression areas is determined by critical stresses of stability loss of a skin σ_{cr}, therefore it is necessary to make it thicker, that results in increasing the mass. For this reason such load-bearing structure of a fuselage is not rational for heavy airplanes.

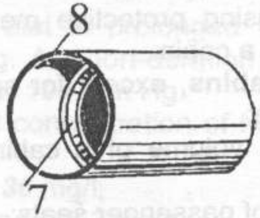

Fig. 8.12. Monocoque fuselage

Wider application of monolithic and sandwich panels in structures of vehicles expands the possibility of using the monocoque fuselages.

All types of the load-bearing structures of fuselages have their disadvantages and advantages, therefore on some airplanes the mixed load-bearing structures are applied. For example, on an airplane-fighter with a nose air intake the nose part of a fuselage is manufactured of a thick skin (monocoque), the middle part, in which there are many cut-outs, has longerons, and tail – stringer (semi-monocoque).

Cabins

The separate compartments in a fuselage which are intended for arrangement of crew, passengers, different freights, household premises are called cabin.

The cabin structure can be unpressurised (low-altitude) and pressurized (high-altitude). On modern airplanes pressurized cabins are applied more often.

The requirements to cabins partially repeat the general requirements to the airplane fuselage :

- the good review for the crew. The following angles of the view are recommended (at horizontal flight): forward-downwards -***15°***, forward-upward ***+30°***, to the left-right ***± 90°***;
- rational layout of the equipment, workplaces of crew, location seats for passengers;

- providing the normalized pressure, temperature, humidity;
- application of an air conditioning for normal vital activity (habitability) of crew and passengers;
- rational arrangement of doors and special hatches for emergency escape of an airplane;
- possibility of using protective means at an emergency case of depressurizing a cabin.

To passenger cabins, except for specified, the additional requirements are made:

- the normalized volume of a cabin per each passenger (not less than ***0.9*** m^3);
- rational layout of passenger seats;
- the normalized lighting;
- presence of personal means of ventilation;
- sufficient sound insulation from engine noise;
- sufficient vibration protection;
- aesthetic interior of a cabin ;
- application of incombustible materials in an interior, and also materials, which at smouldering do not evolve toxic substances;
- presence of household rooms.

The additional requirements **to cargo compartments and luggage cabins**:

- the sizes of hatches should enable to apply means of mechanization of cargo handling activities;
- appearing the airborne means of mechanization of loading-unloading operations;
- arrangement of compartments for hand luggage of the passengers should ensure a required airplane center-of-gravity position even at flight with deficient number of passengers;
- presence of freight fixing means.

Pressurized cabins

The pressurized cabins are applied to provide the normalized vital conditions for crew and passengers. In such cabins the required overpressure of air, its humidity and temperature is maintained.

A type of an airplane and its flight performance determine the requirements for parameters of air in cabins. These normalized parameters are input data for selection of the cabins equipment.

The basic requirement for pressurized cabins consists in ensuring a partial pressure of oxygen, which is enough for normal breathing of the person at all permissible altitudes of airplane flight.

It is established, that in prolonged flight it should be not lower than ***133*** mm Hg. At short-duration flight at the altitude it should be not lower than ***104*** mm Hg.

The following limit concentration of harmful impurities in air of a cabin is permitted:

- carbonic acid – ***36*** mg/l;
- vapor of kerosene – ***0.3*** mg/l;
- oxide of carbon – ***0.02*** mg/l.

Temperature in a cabin should be in the limits of ***18...22°C***, relative humidity ***20...80%***, permissible noise level – up to ***100*** dB.

It should be noted, that the normalized parameters of vital activity in a cabin can be periodically reconsidered in the direction of making them tougher.

The following means are applied for fuselage pressurization:

- sealed riveting, welding and gluing;
- seal of hermetic connectors;
- seal of hatches, windows and doors;
- pressurization of the seals of airplane flight controls and engines control;
- pressurization of the seal of the air and fuel service lines;
- pressurization electric and radio seals;
- pressurization of separate members in case of necessity.

The pressurized cabins can be divided into three types: ventilated, oxygen-ventilated and regenerated.

The ventilated cabins are characterized by a continuous through airflow, which creates the compressor (Fig. 8.13). Here: a – with perfect air change: 1 - air inflow into a cabin, 2 - distributive collector, 3 - cabin, 4 - air discharge into an atmosphere; b - with fractional recirculation: 1 - air inflow in a cabin, 2 - ejector, 3 - distributive collector, 4 - cabin, 5 - air discharge out of a cabin, 6 - the fan, 7 - recirculation line.

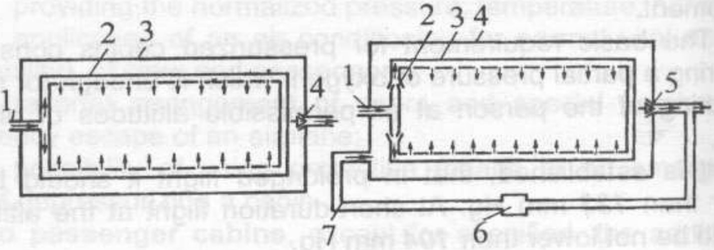

Fig. 8.13. Ventilated cabins

The percentage of oxygen in an air of such cabins is equal to that in an atmosphere. The effective removal of harmful impurities and products of rival acting (habitability) in ventilated cabins is ensured at not less five air changes during one hour in a cockpit and about fifteen one in a passenger cabin.

The oxygen-ventilated cabins also have through ventilation, but in this case fresh air and oxygen are supplied to the cabin moves. The necessary partial pressure of oxygen is built up by total pressure and increased concentration of oxygen in air. But in this case it is necessary to have the appropriate reserve of oxygen aboard.

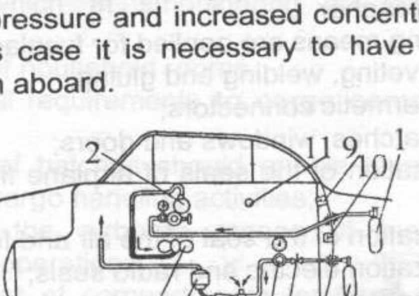

Fig. 8.14. Regenerated cabins

In regenerated cabins the removal of breathing products occurs by passing the air through special chemical cartridges (Fig. 8.14). Here 1 - oxygen tank, 2 - oxygen set, 3 - oxygen mask, 4 - balloon with air, 5 - shutoff valve, 6 - tank, 7 - injector, 8 - regenerative cartridge, 9 - valve of an overpressure, 10 - reverse valve, 11 - manual valve.

On airplanes, which are designed for flight at altitudes less than ***8*** km, rational is an application of pressurized cabins of a ventilated type with atmospheric air bleed from engines.

Cockpit

In a cockpit the crew members, command stations of a control system, different equipment are placed. The cockpit canopy represents a deckhouse (superstructure) more often, which a moderately project beyond appears (insignificantly supports) for fuselage contour. The best shape of a canopy is one which is filled (entered) to fuselage lines.

The glazing of a cockpit canopy is made of an organic or silicate glass. The main requirement to glass of a canopy is invariability of physical-mechanical properties at aerodynamic heating.

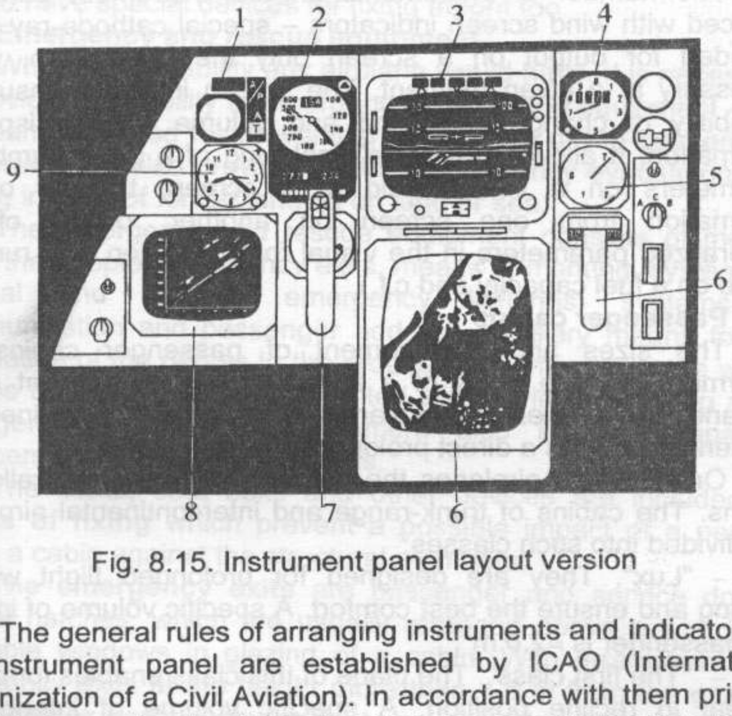

Fig. 8.15. Instrument panel layout version

The general rules of arranging instruments and indicators on an instrument panel are established by ICAO (International Organization of a Civil Aviation). In accordance with them primary flight instruments should be located on an instrument panel as the "T" symbol. In this case the following instruments are arranged on a vertical axis, which coincides with an axis of a pilot seat, from above – flight director indicator (FDI) or flight director, under it – course indicator, to the right of FDI – altimeter, to the left – the speed indicator. Other instruments are arranged according to the discretion of instrument panels designers (Fig. 8.15). Here 1 - fire warning, 2 – speed indicator, 3 - flight director indicator on a cathode-ray screen of kinescope tube, 4 – landing radio altimeter, 5 – variometer, 6 – aircraft control knob, 7 - navigational flight instrument, 8 – combined kinescope tube, 9 - clock.

Arrangement of instruments is executed according to the ergonomics requirements, psychology and aesthetics. Rational arrangement is to supply the crew with necessary information for minimum, and at the same time sufficient for time perception.

The number of instruments on tool instrument panels is reduced with wind screen indicators – special cathode-ray tubes intended for output on a screen only the information, which necessary at a given moment. The screen indicator ensures a capability of change of a kind and volume of the displayed information. It allows to receive displaying of a great number of parameters on a limited field of a screen; transfer of the information from one screen on another; output of the generalized parameters in the visual form (position of a runway, range on a fuel capacity and c.t.).

Passenger cabins

The sizes and arrangement of passenger cabins are determined by the sizes of a fuselage and assignment of an airplane. More often on airplanes of local-service airlines the passenger cabin is a direct prolongation of a cockpit.

On the large airplanes the passenger cabins are called as salons. The cabins of trunk-range and intercontinental airplanes are divided into such classes:

- "Lux". They are designed for prolonged flight without landing and ensure the best comfort. A specific volume of interior per passenger is ≈***2.0*** m^3;
- "The first class". The plane of this class enables for rest in a seat in recline position. A specific volume of interior per passenger is ≈***1.8*** m^3;
- "Tourist". The backs of seats deflect at a low angle. A specific volume of interior per passenger ≈***1.5*** m^3;
- "Economic". It is characterized by the densest

accommodation of passengers. A specific volume of interior per passenger ≈***1.2...0.9*** m^3.

The passenger cabins along a fuselage are divided into some salons, which can have different classes.

Baggage-and-cargo compartments

On passenger airplanes the special compartments for transportation of luggage and commercial freights are provided. On trunk-range and intercontinental airplanes such compartments are arranged under floor of passenger cabins and in the compartments of a fuselage, on other airplanes – in compartments of a fuselage. Each baggage-and-cargo compartment should have hatches for loading-unloading. They should have special devices for fixing freight too.

Emergency and rescue equipment

What ever reliability any airplane would have, it is necessary to provide a feasibility of emergency and rescue equipment – set of means intended for preventing traumatism of the passengers and crew, and also provision of their emergency evacuation and saving in case of forced landing on land or sea.

The emergency and rescue equipment consists of means fixing the people, emergency exits, means of marking, systems of internal and external emergency lightings, systems of communication and passenger address, auxiliary means for an evacuation of the people to the ground. At flights above the water spaces the system is supplemented with saving swimming aids. Emergency and rescue equipment also includes separate members of a fuselage and cabins.

The seats, seat belts and other devices are included **to means of fixing** which prevent a possible impact of a person inside a cabin against the structural members.

The emergency exits are passenger and service doors, special hatches, which are usually arranged above a wing, the openable windows in glazing of a cabin. With arrangement of emergency exits at the height more than ***1.8*** m from the ground the inflatable escape chutes, automatically driven in operation, combined slide-rafts, ropes etc. are used for getting down people.

Means of marking – warning light and emergency exit sign, indicators of motion direction to them, means of their opening etc.

All structure of emergency and rescue equipment and its parameters are determined by the requirements of AR. According to these requirements the kit of the equipment must to be made to provide possibility of evacuating all people from aircraft to the ground during the giventime at emergency exits only from one side of a fuselage or half of all equivalent emergency exits. The realization of this requirement is checked by special tests.

Chapter 9. LANDING GEAR

Purpose:

– to accept static and dynamic loads emerging during take-off, landing and taxiing, by protecting a structure of aircraft members against destruction;

– to absorb and to disperse the energy of aircraft impacts during landing and taxiing on a rough surface;

– to absorb and to disperse a considerable portion of a kinetic energy of a headway movement of aircraft after its touchdown (for reduction of a landing run).

Structure:

– support members (wheel, skis, floats);

– struts, which will connect the support members with aircraft structure;

– shock-absorbers;

– decelerators.

Requirements:

– general requirements: sufficient strength, rigidity, minimum of a mass, etc.;

– to ensure the stable movement and possibilities of pitch control during take-off run of aircraft along runway. The take-off and landing safety largely depends on the solution of this problem. The significance of this requirement increases with increase of take-off and landing speeds. The level of meeting this requirement basically depends on layout of aircraft landing gear;

– to ensure the specified negotiability to aircraft. The level of meeting the negotiability requirement depends on a type of support members and their pressure on a runway. With specified thrust-to-weight ratio they should enable the aircraft to start off from a place and to accelerate the aircraft up to lift-off speed on a runaway. Length and strength of a runway are established by performance. In this case the depth of a track from support members on a ground should not exceed **5** through **8** cm;

– the shock-absorbing system of A/C (wheels and shock-absorbers) should absorb and disperse the normalized energy of impacts during landing i.e. to absorb and to disperse the energy of impact of aircraft against ground. Energy of impact during landing can be determined by the following formula:

$$E = 0.5 \cdot m \cdot V_y^2 \ + \ 0.25 \cdot m \cdot g \cdot H_{y.c.m.}$$

where ***m*** is mass of aircraft; V_y is a vertical component of speed (**5** through **15** m\sec.); $H_{y.c.m.}$ is the shift of an aircraft center of mass because of a shock-absorber compression during impact; g is free-fall acceleration.

The second term usually constitutes approximately ***10%*** of the first one and it can be neglected. The level of meeting this requirement depends on a type of shock-absorbers and wheels;

– the decelerators should ensure the effective braking, absorb and disperse a normalized portion of a kinetic energy of a headway movement of aircraft

$$E = 0.5 \cdot m \cdot V_L^2 ,$$

where V_L is the landing speed of aircraft (***100*** through ***250*** km/h).

The level of meeting the requirement depends on a type and power of brakes;

– to enable aircraft to turn of ***180°*** on a runway of a specified class. This possibility is achieved by supports control, braking capacity, choice of landing gear parameters, type, number and layout of support members;

– the landing gear height should provide a required landing angle of attack;

– the height should be such that distance from the lower structure member to the runway surface would be not less than ***160*** mm during complete deflection of tires and shock-absorbers;

– the landing gear height should ensure the landing with ***10°***,

– landing gear extension and retraction should be performed as quickly as possible. For light airplanes it is for ***6*** through ***12*** sec., for heavy ***12*** through ***15*** sec will be enough;

– providing necessary landing angle of attack;

– to provide a possibility of emergency extension and retraction of a landing gear (there is stand-by extension and retraction system);

– reliable system of fixing the support members and well doors of a landing gear in extended and retracted positions;

– replacement of wheels and brakes without adjustment;

– whenever possible low aerodynamic drag of well doors of a landing gear;

– exception of appearance possibility of self-energizing oscillations of oriented wheels of the nose strut (which are called "shimmy");

– to have a high durability (***20,000*** through ***30,000*** landings);

– to have convenient accesses, good approaches for checks and repair;

– to provide as smaller shift of a center of mass of aircraft as possible during landing gear retracting and extension.

Parameters

The reference points of a landing gear should be disposed at certain distance one from another and from a center of mass for necessary stability and maneuverability of A/C during its movement along the runway.

Main parameters, which characterize the placements of reference points of A/C are as follows:

- track;
- base;
- angle of parking;
- off-set angle of the main wheels regarding to a center of mass;
- an over-turn angle;
- landing gear height.

The wheel track *b* is a distance between centers of contacting areas of the main wheels with runway. It determines the lateral stability of A/C and ease of its maneuvering along runway. The wider track, the less possibility of A/C over-turn to a wing (or sideward) and the better control along runway with the help of brakes. But the directional stability during movement is deteriorated as A/C becomes more sensible to any roughnesses on a runway. A/C can touch ground surface with a wing tip because of insufficient track width at landing or take-off. $b = 0.15$ through 0.35 track in modern airplanes and it is 0.5 wing span in airplanes with small aspect ratio of a wing ($\lambda < 4.5$).

Landing gear **wheel base B** is a center distance of wheels of the main and front (rear) supports. It is expedient to make base larger for the landing gear with a front support because in this case probability of danger of aircraft overturn over a nose (nosing-over) decreases.

The angle of parking φ_1 is an angle between a reference line of a fuselage and surface of runway. It is equal to 0 through $4°$ for a landing gear with a front support and $\varphi_1 = \alpha_L - \alpha_3$ for a landing gear with a tail support. Here α_L is an angle of attack on landing, which corresponds with magnitude of a lift coefficient at landing c_{LL} and α_3 is an angle between a wing chord and axis of a fuselage (adjustable angle or angle of wing).

The over-turn angle φ for aircraft with a nose wheel is an angle between a plane, which passes regarding to the main wheels and tailpiece of a fuselage and a level of runway while aircraft is on parking.

Angle of a castor length γ is an angle between a vertical and plane passing through a center of mass and a point of contact of the main wheels with runway during parking with deflected shock-absorbers.

Off-set of the main supports regarding to the center of mass **e** together with an angle γ. Usually **e** is within the limits (0.12 through 0.06) b. The magnitude **e** determines load on front (or on tail) support. The greater value **e**, the greater front (tail) support loads and more difficult to take off a front support during take-off. But to reduce **e** signifies to reduce γ, and it is connected with φ, but φ is connected with α_L. Parameter α_L is already characteristic of a wing. As we can see the parameters of a landing gear are determined by wing parameters to a certain measure.

Landing gear height H is a distance from a runway up to an aircraft center of mass. H is determined from a condition that distance from tips of propeller blades when tires and shock-absorbers are completely deflected to a surface of runway, should not be less than ***50*** cm during a base (longitudinal) axis of aircraft in horizontal position for airplanes with piston and turboprop engines.

Landing gear height is accepted as minimum under condition of maintaining over-turn angle φ in the boundaries, which provide landing angle of attack of wing α_L in gas-turbine-engined airplanes. The angle φ is determined as follows:

$$\varphi = \alpha_L - \alpha_3 - \varphi_1 ,$$

where α_L is a landing angle, α_3 is a setting angle of a wing incidence, φ_1 is an angle of parking.

Landing gear layout

As it was already indicated the following layouts of a landing gear are applied for modern landplanes:

- three-support landing gear with a tail support;
- three-support landing gear with a nose support;
- double-support landing gear with auxiliary supports (bicycle landing gear).

Let's consider the parameters and characteristics of the various layouts of a landing gear.

Three-support landing gear with a tail support

Parameters of this layout of a landing gear are as follows (Fig. 9.1): B is a wheel track, H is landing gear height, γ is a counter-nose-over angle, λ is an angle of off-set of the main supports regarding to the center of mass.

Usually the track is accepted within limits B = (***0.8*** through ***0.3***) ***l***, where ***l*** is a wing span.

Two main supports of aircraft are in front of center of mass at the distance of approximately ***0.1 b*** (base) of a landing gear with such landing gear layout. That is why up to ***90%*** of aircraft mass, while it is on parking, fall on the main supports.

The tail support is off-set far back and approximately ***10%*** of a mass of aircraft fall on it, it is much more shorter and less than the main supports. It results in reducing its mass and simplifies the retraction.

The main advantages of this layout are as follows:

- smaller mass of a landing gear;

– higher negotiability, because an inertial force, which is applied in a center of mass, unloads a rear support.

There are following disadvantages:

– tendency of aircraft to nosing-over specially during run after landing or during taxiing at increased speed. The condition of nosing-over can be written as the following inequality:

$$m \cdot \frac{dV}{dt} \cdot H > m \cdot g \cdot e,$$

where ***m*** is an aircraft mass; $\frac{dV}{dt}$ is an acceleration, in this case deceleration during braking; ***H*** is a landing gear height; **e** is distance from a center of mass up to points of wheels supporting ;

– owing to that we have the following disadvantage here: impossibility of effective braking because of increase in this case ***dV/dt*** up to dangerous magnitudes;

– possibility of periodic bouncing of aircraft after landing.

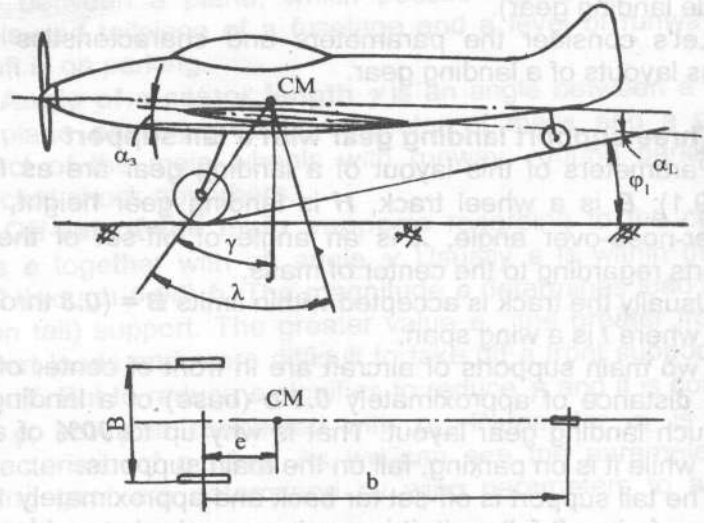

Fig. 9.1. Tail landing gear

The reason is that the main supports are disposed in front of center of mass and during their impact against ground the aircraft angle of attack is increased and therefore lift should be increased too. The amplitude of these bounces can increase until a landing gear can be destroyed or up to a nose-over of aircraft (let's cite the diagram of force actions in this case) (Fig. 9.2).

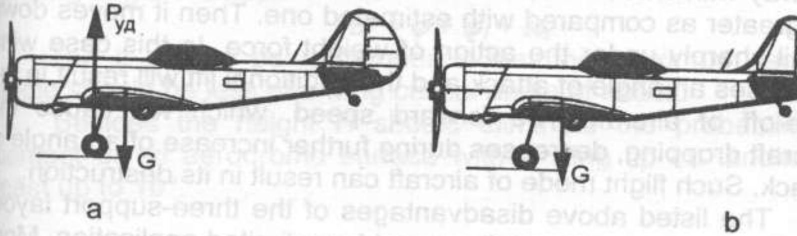

Fig. 9.2. Possibility of periodic bouncing of aircraft after landing

– poor directional stability. During movement of aircraft on an aerodrome with drift (Fig. 9.3) the lateral components of friction forces of the main supports wheels with ground will create the moment regarding to a vertical axis passing through a center of mass. This moment aims to increase an angle of drift. It is possible to reduce this disadvantage by locking a tail wheel but the special device is necessary for this purpose;

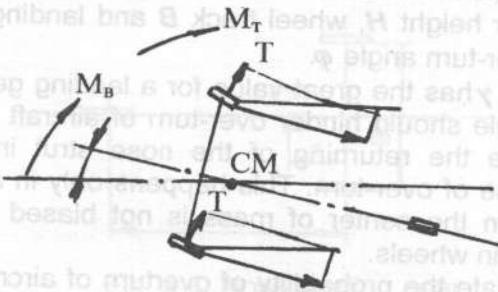

Fig. 9.3. Directional instability of landing gear

– possibility of destruction of a runway under jet action of exhaust gases of a jet engine (because of a tilting of an aircraft axis in a parking position);

– the poor view for the pilots during movement and parking (because of a tilting of a fuselage axis);

– landing gear with a tail support imposes the higher requirements to calculation of landing. Firstly aircraft touches the runway with wheels of the main supports if the landing speed will be greater as compared with estimated one. Then it moves down a tail sharply under the action of weight force. In this case wing increases an angle of attack and the additional lift will result in the take-off of aircraft. The forward speed, which will cause the aircraft dropping, decreases during further increase of an angle of attack. Such flight mode of aircraft can result in its destruction.

The listed above disadvantages of the three-support layout of a landing gear with a tail support have limited application. More often such layout is expedient for airplanes with engine placement in a nose part of a fuselage. It also looks advantageously unpaved runways. The landing gear with a tail support is applied for airplanes with low climbing and landing speeds, when the disadvantages are displayed not such obviously but we have the advantageous in mass.

Three-support landing gear with a front support

Main parameters of this landing gear layout (Fig. 9.4) are as follows: an angle of off-set of the main supports wheels backward γ, landing gear height H, wheel track B and landing gear wheel base b, an over-turn angle φ.

An angle γ has the great value for a landing gear with nose strut. This angle should hinder over-turn of aircraft onto a tail. It should provide the returning of the nose strut into the initial position in case of over-turn. This happens only in a case, when during overturn the center of mass is not biased in a position behind the main wheels.

To eliminate the probability of overturn of aircraft onto a tail on landing it is necessary to execute the following condition:

$$\gamma = \varphi + (1...2^\circ).$$

But the airplane with a front support has difficulties with increase of an angle γ during take-off.

The angle of parking φ_1 is an angle between an axis of a fuselage and surface of an aerodrome during parking of aircraft. It is selected on a condition of obtaining the least take-off run length during take-off. That is, the take-off run should be done with particular wing angle of attack, which has a title of the optimal angle of attack during take-off run. Usually $\varphi_1 = 0 \ldots 4°$.

The height of a landing gear H should ensure a maximum landing angle of attack

$$\alpha_L = \varphi + \varphi_1 + \alpha_3.$$

But it should be remembered that the maximum landing angle should be less of a wing critical angle of attack.

Besides the height H should eliminate the probability of contact of an aerodrome surface with a wing tip on landing at least up to **10°**.

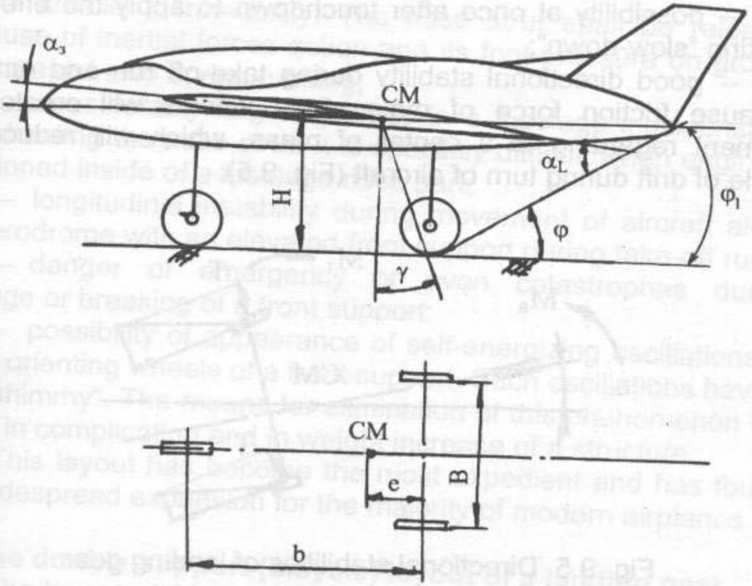

Fig. 9.4. Nose landing gear

The landing gear wheel base is equal to $b = (0.3 \ldots 0.4)\, L_f$, (where L_f is a length of a fuselage) for the majority of airplanes. The least magnitude of a track B is determined judging from a condition of impossibility of lateral nose-over. $B/b = 0.7$ through **1.2** for the majority of airplanes.

Advantages of a landing gear with a front support is contrasted to landing gear with a tail support and are the followings:

– decreasing the probability of periodic bounces of aircraft after landing. The aircraft nose comes downwards under the action of forces affixed in an aircraft center of mass after a touchdown with wheels of the main supports. In this case a wing angle of attack decreases and aircraft ballooning is eliminated;

– decreasing the probability of nose-over. The condition of nose-over will be in the following view:

$$m\cdot(dV/dt)\cdot H > m\cdot g\cdot a,$$

where ***a* = (*b*-*e*)**. Probability of nose-over is very small because ***a*>>*e***;

– possibility at once after touchdown to apply the effective braking “slow-down”;

– good directional stability during take-off run and running because friction force of main struts wheels will create the moment regarding to a center of mass, which will reduce an angle of drift during turn of aircraft (Fig. 9.5).

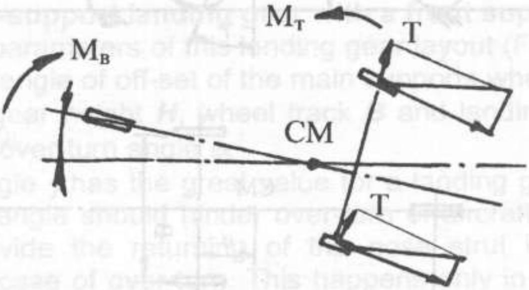

Fig. 9.5. Directional stabilities of landing gear

The wheels of a front support are made as freely-oriented one for improvement of directional stability;

– the good view for the pilots, convenience to the passengers, ease of a loading-unloading. It provides the horizontal position or close to it of a fuselage axis;

– this reduces probability of an aerodrome surface damage by a jet exhaust fluids of a jet engine.

– possibility of landing with high speed, which simplifies calculation of a landing mode. Aircraft with a front support after touchdown with wheels of main struts noses down under the action of weight force, which is affixed in a center of mass. In this case angle of attack decreases and take-off does not take place.

Disadvantages:

– summary mass of struts will be greater in comparison with landing gear with a tail support. It is caused by a bigger height of the nose strut and therefore by a bending moment, which is forced onto it as well as by additional load onto it from forces of inertia;

– smaller permeability. The nose strut shall be reloaded because of inertial forces action and its foot-pressure on ground is increased also during running;

– considerably larger volumes in a fuselage indispensable for retracting the nose strut. It is specially difficult when engine is positioned inside of a fuselage nose part;

– longitudinal instability during movement of aircraft along an aerodrome with an elevated front support during take-off run;

– danger of emergency or even catastrophes during damage or breaking of a front support;

– possibility of appearance of self-energizing oscillations of freely orienting wheels of a front support. Such oscillations have a title "shimmy". The means for elimination of this phenomenon will result in complicating and in weight increase of a structure.

This layout has become the most expedient and has found the widespread expansion for the majority of modern airplanes.

The double-support (bicycle) layout of a landing gear

The layout of this type of a landing gear includes a choice of the following leading parameters: such as an angle of off-set of rear support wheels γ, parking angle φ_1, an over-turn angle φ, height of a landing gear H, landing gear wheel base b, track of under -wing supports B (Fig. 9.6).

Two approximately identical supports as per accepted dead loads are installed under a fuselage according to such layout. The rear support is stronger because aircraft center of mass is closer to it. Under- wing supports are installed on aircraft for protection against wing drop. Having weak shock-absorption and freely-oriented wheels these supports provide aircraft with sufficient lateral stability.

The double-support layout of a landing gear has big mass. If it is applied there, then there must be lot of objective reasons. For example it is applicable for vertical take-off and landing airplanes (VTOL) or for high-wing monoplane bombers. Usual three-support layouts are hindered.

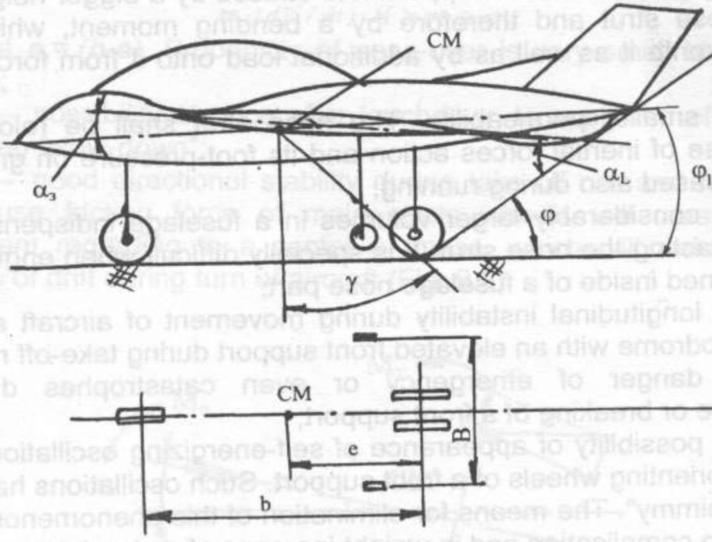

Fig. 9.6. Bicycle landing gear

Advantages:

– simplified protection of supports against a hot stream of gas flow of an engine on vertical take-off and landing airplanes;

– equalization of traffic between wheels of rear and front supports producing to a pressure decrease on a surface of runway;

– small height of a landing gear for airplanes - high-wing monoplanes;

– absence of nacelles for landing gear struts retracting on a wing;

Disadvantages:

– the necessity of allocation of a considerable volume inside of fuselage mid-range for a rear support and that is not so simple for a freight airplane and for aircraft with engine placement in a fuselage mid-range;

– over -heaviness of a fuselage by large loads on it from struts and availability of large cut-outs for wells of a landing gear;

– rolling instability during movement along runway;

– complexities when landing with a cross wind;

– complexities of taxiing along runway because of a large load into a front support;

– necessity of installation of additional mechanisms for artificial increase of an angle of attack during take-off by elongation of front or truncation of a rear support;

– split-hair accuracy of landing approach (for providing simultaneous touchdown on two supports as well as output of additional supports on runway);

– increase of a summary mass of a landing gear by availability of additional under-wing struts, which do not participate in taking external estimated loads;

– low permeability because of load increasing on a front support is.

As it was already noted the bicycle layout of a landing gear is limited in application.

Loads on a landing gear

The external loads on a landing gear can be both static and dynamic ones. However main design loads are dynamic. They are taken into account during determination of strength of not only own members of a landing gear layout but also those members to which the landing gear is attached. Their value and direction are determined mainly by conditions and character of landing (for example, the rigid landing simultaneously on three supports means the vertical impact or the drift landing). Besides that the condition of an aerodrome surface (such as tripping-over, an irregularity, frontal impact, etc.) influences too. The take-off and landing characteristics of aircraft, load-carrying structures of supports, type of support members, characteristic of an shock-absorption system, etc. influence the loads too.

At first let's consider load, which acts on landing gear struts. There are forces of reaction of ground, they are directed upward vertically and are equated to aircraft weight while parking.

The reference normal forces and friction forces act on them during movement of aircraft along the runway. The value of friction forces depends on wheel load, condition and type of the runway coating.

A front support is lifted off from runway with the help of an elevator during take-off run and when certain speed is reached. Wing angle of attack increases sharply in this case, the lift is also increased and struts are unloaded. It is $Y = m\,g$ during lift-off time and the load on struts is equal to zero. The loads on struts are low during take-off and consequently the strength of their members is not determined in this mode.

Let's indicate some characteristic estimated cases, which conform the largest load on a landing gear support. All these cases are shown in the AR standards in accordance with which the direction of an external loading, factor of an operating overload of a landing gear n^e and safety factor f are determined.

The rigid landing with as much as maximum permissible value of a vertical velocity V_y is called vertical impact a E_{LG} case. Maximum permissible vertical load acts on main struts.

Front impact for a wheel of both main struts is a E_{LG} case.

Action of maximum lateral force (side impact) on the strut is a R_{LG} case.

The value of g-load factor n^e lies within limits 2.0 through 3.5 and factor is $f = 1.5$ through 2.0.

During definition of loads on a front support they will have the value $n^e = 4$ through 5 and factor is $f = 1.65$.

The main constituents of struts

Combination of all members, which transmit load to an airframe from runway are termed as landing gear struts. The following main members of the strut are distinguished depending on purpose, character of load and the operation to be performed:

- support members (wheels);
- load-bearing members,
- members of kinematics and control,
- damping devices.

The separate members can perform various functions.

The wheels are intended for movement of A/C along runway and take up part of impacts energy. They are subdivided into wheels with brakes and without ones. Wheels without brakes are installed on rear supports, auxiliary under-wing supports and on nose supports of light airplanes. The wheels with brakes are installed on the main supports, on front supports of fast airplanes, on both supports of an aircraft with bicycle landing gear.

Main parts of each wheel are: a drum, (body, hub), aircraft-tire, and decelerator (arresting device).

Most often the **drum** is manufactured as cast of magnesium, aluminum or titanium alloys. Sometimes die-forged drums are applied. They are loaded by great radial forces and are subject to considerable thermal heating during braking. The heat rejection takes place because of high thermal capacity of a drum material and availability of special cooling ribs on its surface.

The tire consists of cover and tire inner tube, where air is pumped into or only tire (in tubeless version). The tire has a primary structure (cord), which is manufactured of nylon threads layers. Protective layer is the protector made of high-strength vulcanized rubber. The protector has the corrugation for better traction with a runway surface. The wheels without brakes may be without the corrugation.

The initial pressure in tires ranges within limits from ***0.25*** MPa (low-pressure tire) up to ***1.5*** MPa (high-pressure tire). The tires with higher pressure have the smaller sizes and are applied for airplanes, the take-off and landing of which takes place on a hard-surface runway. The decreasing of pressure in tires increases their negotiability on soft unsteady ground with decreasing specific pressure into surface. This pressure is approximately equal to the pressure inside a tire. The low-pressure tires are applied on airplanes, take-off and landing of which are foreseen on runway without hard surface.

The wheels for A/C are selected according to the catalogues depending on a parking load. The most widespread sizes of tires are as follows: diameter ***600*** through ***1600*** mm, width ***200*** through ***550*** mm.

The brakes are intended for absorption of the portion of a kinetic energy. It is necessary to diffuse the huge energy of movement during landing run of ***15*** through ***30*** sec. A part of energy is to be spent for an aerodynamic drag, part for drag of wheel rolling and greater part (above ***70%***) is dispersed as heat by brakes. The application of wheels with brakes allows to reduce a landing run of aircraft and to reduce the sizes of an aerodrome sharply. The brakes improve the ground maneuverability, allow to test engines without under-laying chocks. The increase of braking effectiveness is reached by installation of anti-skid units, which prevent tire slipping (skidding). In turn it reduces a landing run and drift of tires. The decelerators of wheels can be as follows: blocking, disk and expander tube brake with hydraulic, electrical, air and mechanical actuators. The instruments and light warning are installed in a cabin for controlling operation of braking system.

Shock-absorbers are devices intended for absorption and partial dispersion of a kinetic energy of impacts at landing and movement of A/C on runway irregularities.

The load-bearing members take-up and transmit external load (transversal and longitudinal forces, moments of a bending and torsion) to an airframe. For example, the barrel of a shock-absorber strut, brace with two links, wheel fork and attachment points of the strut to a fuselage belong to them.

Members of kinematics and the controls perform rise and extension of the strut and turn of a wheel. Most often the extension and retraction of the strut are performed by hydraulic jack. The strut is held by a brace and is fixed with a lock in an extended position. The strut is fixed with other lock after retracting. The wheel turn is performed with hydraulic cylinders.

The damping devices consist of a strut shock-absorber, wheel tires and oscillation dampers, which are more often combined with cylinders. They absorb and partially disperse the energy of A/C impacts against ground, reduce the ground load and prevent the origin of oscillations at landing and movement on runway.

The load-carrying structures of landing gear struts

Mutual arrangement of the main load-bearing members regarding to the strut create its load-carrying structure (the load-carrying structures of landing gear). The choice of load-carrying structure of a strut (and accordingly and its structure) is determined by external loads, configuration of a landing gear under A/C, kinematics of extension-retracting and forth.

According to the load-carrying structures the landing gear struts can be divided into two classes. They are truss-type and beam-type.

The truss-type configurations of a landing gear are applied as a rule for fixed struts of low-speed airplanes. The main advantage is a small mass and simplicity of a structure. The main disadvantage is a high aerodynamic drag.

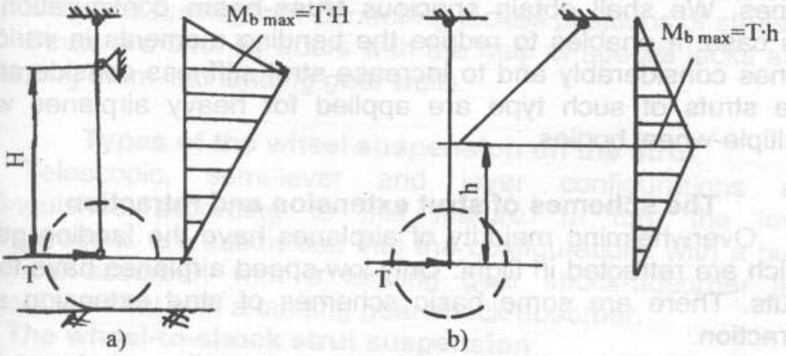

Fig. 9.7. Landing gear loading

In their turn the beam load-carrying structures are subdivided into two kinds: cantilever and braced.

The beam cantilever landing gear represents a cantilever strut, which is fixed by top end into units on an airframe of A/C. The wheel is installed on its lower end (Fig. 9.7, a). In this case loads are great on the strut in particular in an attachment point to an airframe. It does not provide the rigidity in longitudinal and transversal directions. It assists the origin of various oscillations during movement along runway.

Advantages are design simplicity and small overall dimensions. Disadvantages are more complicated conditions of loading, large value M_{bmax} and large mass as consequence. That is why such type of load-carrying structure of a landing gear is applied for small low-speed airplanes.

In **the beam braced** configuration (Fig. 9.7, b) the strut is reinforced with braces in one or two planes. It will result in its unloading from a bending moment. Jack of a landing gear strut can serve as one of braces. One brace may be set at the angle to a longitudinal plane of A/C symmetry, which will carry the load in both planes.

The braced configuration is widely used despite great design complexity in comparison with cantilever configuration. The main advantage is more favorable conditions of loading.

The strut may be reinforced with several braces in various planes. We shall obtain spacious **truss-beam** configuration in this case. It enables to reduce the bending moments in various planes considerably and to increase strut stiffness considerably. The struts of such type are applied for heavy airplanes with multiple-wheel bodies.

The schemes of strut extension and retraction

Overwhelming majority of airplanes have the landing gear, which are retracted in flight. Only low-speed airplanes have fixed struts. There are some basic schemes of strut extension and retraction.

Usually the main struts of light and medium airplanes are retracted into a wing (in some cases inside special well, sometimes inside an engine nacelle or partially into a wing and fuselage. Usually struts are retracted directly into a fuselage or into special nacelles on the sides of a fuselage on heavy airplanes. The front struts are retracted into a fuselage nose and tail struts into rear part.

The retracted landing gear position is mainly determined by general layout of aircraft, availability of a free volume inside an airframe, arrangement of its load-bearing members. Retraction of struts should be performed by their rotation regarding to one and quite often two or three axes (retracting in turn). Wheel bodies practically always rotate regarding to the strut and at present time wheels quite often take the smallest volume in a retracted position. Struts are fixed with locks in a retracted position. More often two locks are applied: one is mechanical, the other is hydraulic.

The schemes of front (nose) struts retraction are less complicated. These struts are hidden upward forward or upward backward on the majority of airplanes. And sometimes they are hidden only sideward. In emergency cases the upward forward movement provides strut extension not only by action of weight force but also dynamic pressure of an airflow . The fixation is performed with locks in an extended position as well. The extension and retraction takes place by means of special load-carrying systems. Light electrical warning system is installed in a cabin and back-up duplicating mechanical indicators are installed on a wing and fuselage for controlling locked positions of struts.

Struts are shut by doors with the help of special jacks after retracting them into landing gear wells.

Types of the wheel suspension on the strut

Telescopic, semi-lever and lever configurations are distinguished according to this feature. In turn the lever configurations are subdivided into the configurations with a built-in shock-absorber, with a landing gear shock-absorber and without the strut with a landing gear shock-absorber.

The wheel-to-shock strut suspension

With a rod, which is put on by the wheels, the cylinder of a shock-absorber is landing gear strut too with such configuration (Fig. 9.8, a, b). This shock-absorber strut carries the compressive stresses N, shear force Q, bending M_b and torsion M_t. The torque from a rod into the cylinder is transmitted by hinged torque link (spin-hinge), the members of which carry bending stress. Due to design simplicity this configuration has found widespread application.

Poor shock-absorption of front impacts and intensive friction in axle boxes of compressions during bending shock-absorber rod should be indicated as disadvantages of this configuration. It deteriorates the operating conditions of compression. In turn it does not allow to receive the optimal efforts of preliminary charging of a shock-absorber. That is why its specifications are reduced and the mass is increased.

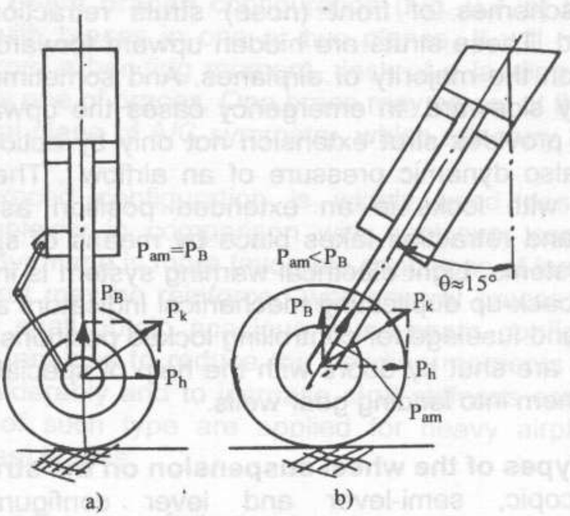

Fig. 9.8. Wheel-to-shock strut suspension

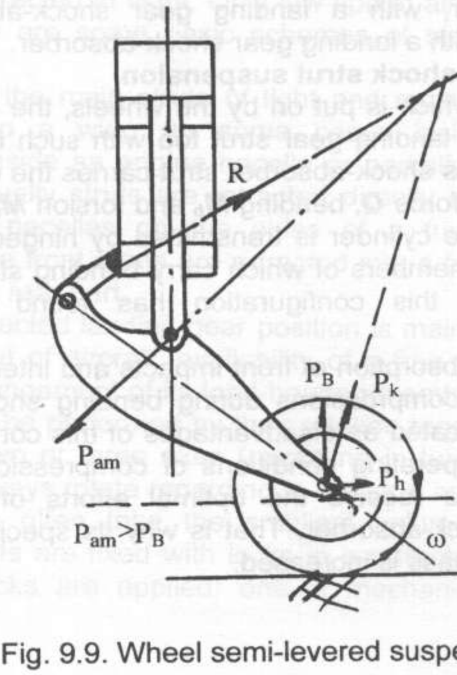

Fig. 9.9. Wheel semi-levered suspension

The wheel semi-levered suspension

Such type of the wheel suspension provides the shock-absorption of front impact (Fig. 9.9).

Here strut also carries ***N***, ***Q***, ***M***M_b, M_t. The front impact is better taken due to availability of the lever.

Besides that, the shock-absorber force increases as compared with wheel load. It results in decreasing a stroke and overall dimensions of a shock-absorber. The strut is loaded from a link with force R in the wheel semi-levered suspension.

The wheel levered suspension

In this case the lever is rigidly attached to the strut but a link is not hinged (Fig. 9.10). That is why instead of force, as in the previous case, a moment is transmitted to the strut.

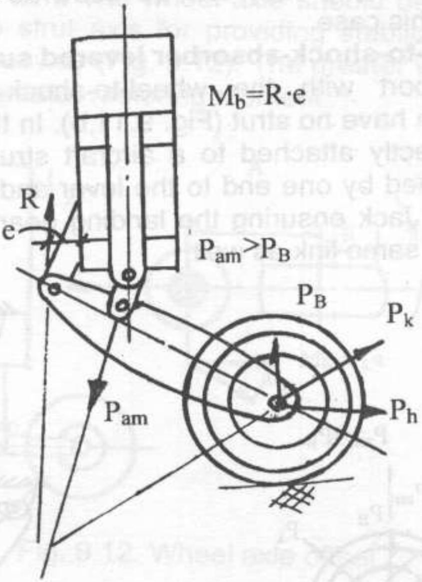

Fig. 9.10. Wheel levered suspensions

But in this case a rod of a shock-absorber is partially unloaded from bending moment M_b by improving conditions of compression operation. Therefore it improves the operation of whole shock-absorber too.

The wheel-to-shock-absorber suspension

In this case (Fig. 9.11,a) the shock-absorber has hinges from both ends that is why it takes up only axial forces. Such shock-absorber is unloaded from a bending. It reduces the friction forces in realigns improves their operational conditions.

Consequence is the possibility to raise the charge pressure in a shock-absorber as compared with wheel levered type. In turn it reduces the overall dimensions of a shock-absorber and increases its reliability.

But the lever strut with borne shock-absorber has larger overall dimensions, larger mass, requires larger well volumes for retracting. The empty strut can be used as a container for a pressed air in this case.

The wheel-to-shock-absorber levered suspension

The support with the wheel-to-shock-absorber levered suspension can have no strut (Fig. 9.11,b). In this case lever with a wheel is directly attached to a aircraft structure. The shock-absorber is joined by one end to the lever and by other one to a link of aircraft. Jack ensuring the landing gear retraction can be attached to the same link as well.

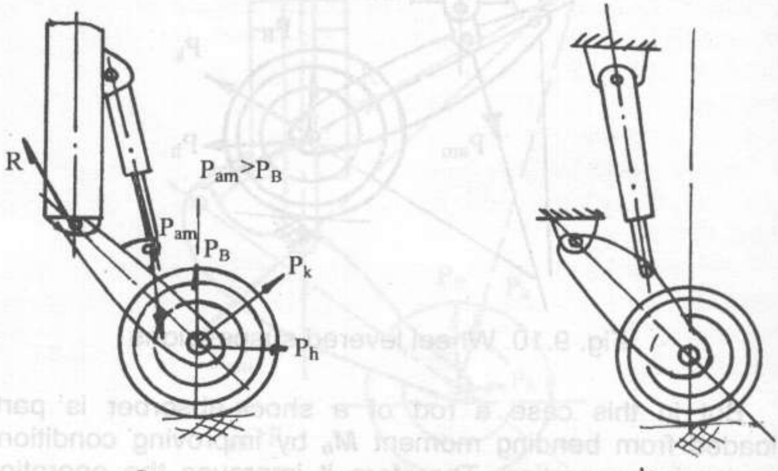

a b

Fig. 9.11. Wheel-to-shock absorber levered suspension (a) and one without the strut (b)

The acceptable overall general dimensions of the strut, simplicity of configuration of kinematics have allowed using it widely as the main support for light maneuverable airplanes.

Design features of landing gear

Of course each type of aircraft has own design approaches for landing gear struts. But at the same time it is possible to select the main design features of struts inherent to many airplanes:

- design features of front supports are as follows: the wheels of these supports should be at first freely-orienting for providing directional stability and secondly, controllable for providing aircraft turn. The wheel axle should be displaced back in relation to the strut axis for providing stabilization of aircraft movement on a runway (Fig. 9.12). The greater wheel axle offset backward is the greater restoring moment.

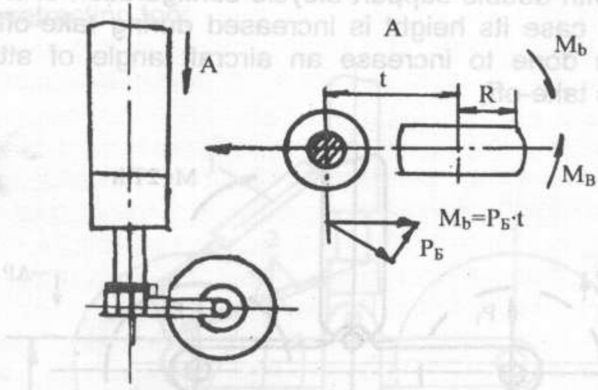

Fig. 9.12. Wheel axle offset

But the general dimensions of the strut and therefore sizes of a well are increased in this case. And it complicates the retraction in a nose part of a fuselage. That is why usually the offset is accepted equal radius of a wheel ***t* = *R***;

- feature of the nose strut is also as follows: availability of a cam gear in a shock-absorber strut. It serves for installation of wheels of a front support to a neutral position to flight direction after wheel lift-off from an aerodrome surface during take-off (Fig. 9.13);

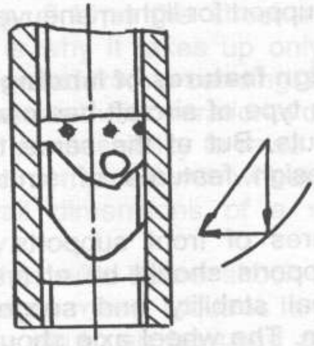

Fig. 9.13. Gear turn scheme

– the front support is made as climbing (or rear one as shortened) with double-support bicycle configuration of a landing gear. In this case its height is increased during take-off run of aircraft. It is done to increase an aircraft angle of attack for facilitating its take-off;

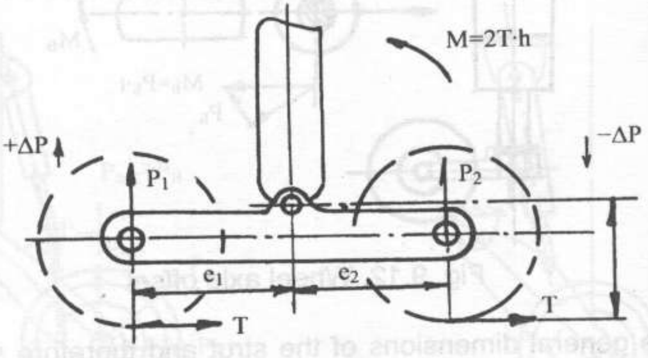

Fig. 9.14. Bogie turn scheme

– landing gear struts are made shortened for convenience of loading (through front and back hatches) for transport airplanes with large weight lifting capacity. It relates to front and main struts;

– as it was already mentioned, the hinge torque links (spin-hinges) are applied for struts of a telescopic type to prevent the wheel turn;

– the upper link of a spin-hinge is attached to the member turning around the strut for a control ability of a front wheel. The member is connected to the cylinder of wheel turn;

– the turning member is connected to a cylinder-damper (of "shimmy"-type) if a wheel is freely-orienting;

– the braking distance of aircraft after landing will be less during braking by rolling than during braking by slipping (so-called "skidding"). Therefore, anti-skid devices preventing complete interlock of wheels by brakes are often applied on airplanes ;

– during installation of wheels in two and more rows on a support bogie, this bogie is hinged to the strut by horizontal hinge (Fig. 9.14).
It removes a bending moment from the strut, reduces its load during moving through roughnesses. It allows to turn a bogie during retracting too;

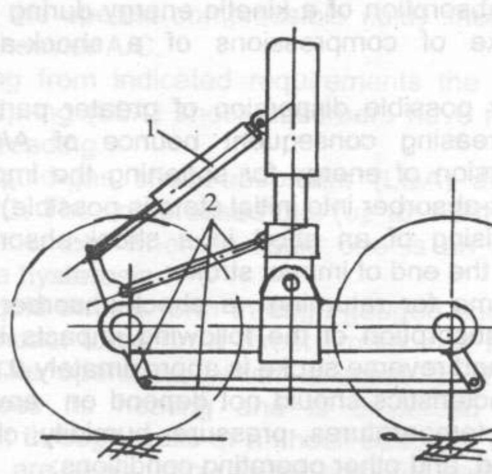

Fig. 9.15. Gear of nose wheels unloading

– the inclined position of a bogie regarding to the strut reduces front impact. A bogie damper 1 provides the required position of a bogie regarding to an axis of the strut (see

Fig. 9.15). It also suppresses the oscillations of a bogie regarding to its axis;

– the special gears of nose wheels unloading (compensatory gears 2, Fig. 9.15) are installed for an equalization of load between nose and tail wheels of a bogie.

Shock-absorbers

Purpose

The shock-absorbers serve for an absorption of a greater part of impacts at landing and movement of aircraft on an aerodrome at specified g-loads for dispersion of absorbed energy to decrease the loads acting on it in this case.

The main part of absorbed energy converts to a potential one of deformation of an elastic body. Rubber, springs, gas, liquid can be used as an elastic body in shock-absorbers. The dispersion of energy is done by irreversible transformation of it to a thermal energy.

Requirements:

– greater absorption of a kinetic energy during touchdown on impact stroke of compressions of a shock-absorber is possible;

– whenever possible dispersion of greater part of impact energy for decreasing consequent bounce of A/C (greater hysteresis dispersion of energy for softening the impact during returning a shock-absorber into initial state is possible);

– smooth rising of an effort in a shock-absorber to the greatest value at the end of impact stroke;

– shorter time for returning a shock-absorber into initial state for shock-absorption of the following impacts is possible. Time of a direct and reverse stroke is approximately ***0.8*** sec;

– the characteristics should not depend on environmental factors: such as temperatures, pressure, humidity, change-over of travelling speed, and other operating conditions;

– absorption of landing impact energy with minimum g-loads and smooth increase of load to a landing gear strut.

The shock-absorbers take up the main portion of energy of A/C impact and their characteristics are basically determined by parameters of working medium.

The shock-absorber consists of two functional members: they are damping and elastic . **The damping member** absorbs and partially disperses the energy, **elastic** one returns a shock-absorber into initial position. Therein lies the key difference between a shock-absorber and damper: **the damper** is reset into initial position only under action of an external loading of the opposite sign. That is, it has no elastic member and can suppress only oscillations, which are alternating-sign according to definition. The shock-absorber takes up only impacts from one definite direction.

Of course, the shock-absorber can be developed as one physical body, which performs functions of both damper and elastic body. The examples are rubber, spring and gas shock-absorbers. But the characteristics of such shock-absorbers are not so perfect because they disperse a small portion of absorbed energy (small **hysteresis** as experts say). That is why they can be applied only for light A/C. Liquid-gas (working medium is the incompressible fluid and nitrogen) and liquid-spring (working medium is the special compressible fluid) shock-absorbers are applied for heavier A/C.

Judging from indicated requirements the liquid-gas (LGA) and liquid-spring (LSA) shock-absorbers have received now the greatest spreading.

The liquid-gas shock-absorbers (LGA) are applied more often for A/C. The compressed gas (up to ***1.5*** through ***5*** MPa) is an elastic member whereas liquid one is an energy absorber increasing a hysteresis.

The liquid thrusts forth through gauged openings under the action of impact force on a direct stroke in a liquid-gas shock-absorber. The operation, which is spent for thrusting forth a liquid, causes its heating and is dispersed as heat in an environment through walls of a shock-absorber body. The piston with a rod are reset into initial position under the action of compressed gas force on an impact stroke. The weight force helps in it. In this case liquid is heated again because of friction.

There is a wide variety of LGA: they are piston, plunger, single-chamber, dual-chamber, etc. Type choosing LGA is determined by the characteristics of A/C, type of aerodromes, climatic conditions of operation.

The cylinder and rod of a shock-absorber are manufactured of high-strength steel alloy. There are pipe connections for a liquid filling-up and gas charging in a top part of the cylinder.

The shock-absorber can be both built-in in a landing gear strut, which in this case is its cylinder, and manufactured as a separate structure.

The LGA configuration and principle of operation

There is a great number of the design concepts of LGA. But the structures of plunger shock-absorbed are most widespread (Fig. 9.16).

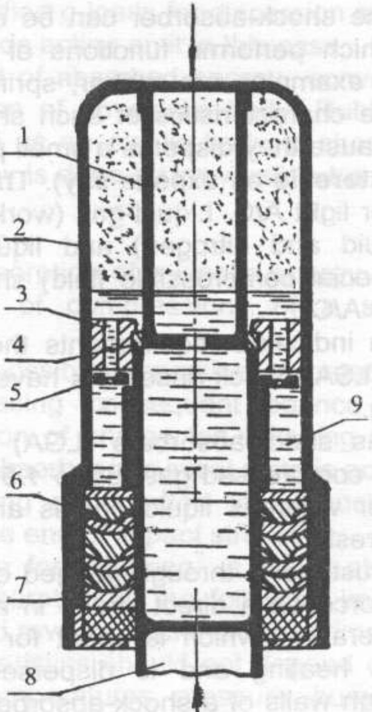

Fig. 9.16. Liquid-gas absorber scheme

Main parts of a plunger shock-absorber are the barrel 2, rod 8 and plunger 1. The lower cavity of a shock-absorber is filled in with a liquid and upper one with gas. The rod displacing inside the barrel cylinder leans upon two axle-boxes: there are upper 3 with a space ring 4 and lower 7. The upper axle-box is fixed to a rod and lower one more often to the cylinder. Seal 6 is installed here too.

The gas most often the nitrogen is an elastic body absorbing the part of total energy and ensuring the returning of a shock-absorber into initial state in LGA, the liquid, usually a spirit and glycerol mixture or special oil, serves for an absorption and dispersion of an energy portion. Gas compression takes place during impact stroke. Overflow of a liquid takes place from one cavity to another 9 through small holes (or through a gap between rods and plunger) simultaneously. The liquid is heated because of emerging hydraulic friction. Energy spent for thrusting forth a liquid through holes, transforms into heat and is dispersed into atmosphere through cylinder walls .

The shock-absorber will begin to perform a recovery stroke due to accumulation of energy in gas during its compression. In this case the liquid flows from one cavity into another through the same holes in the opposite direction. The snubber valve 5 is closed in this case. The portion of energy transforms to heat again and is dispersed. Other portion of energy of compressed gas is spent for moving up aircraft center of mass and is dispersed during consequent cycles of a shock-absorber operation if repeated impacts are absent.

Performance chart of a shock-absorber

The kinetic energy of aircraft during touchdown, which should be absorbed by damping devices A_{AR}, is determined according to AR.

As a result the operation (energy) taken up by a shock-absorber of one landing gear strut A_{SA}, is equal to

$$A_{SA} = \frac{A_{AR} - z_W \cdot A_{PN}}{k},$$

where z_W is a number of wheels on a landing gear strut; A_{PN} is an energy of impact, which is absorbed by one wheel (it is determined according to catalogues), k is the number of struts on the support of a landing gear.

The A_{SA} operation can be determined from the following expression:

$$A_{SA} = P_{max} \cdot S_{max} \cdot \eta,$$

where P_{max} is a maximum effort of a shock-absorber; S_{max} is a maximum stroke of a shock-absorber; η is a coefficient of fineness of the chart, which expresses operation of a shock-absorber.

The performance chart of LGA disregarding of friction forces in axle-boxes is shown in a Fig. 9.17.

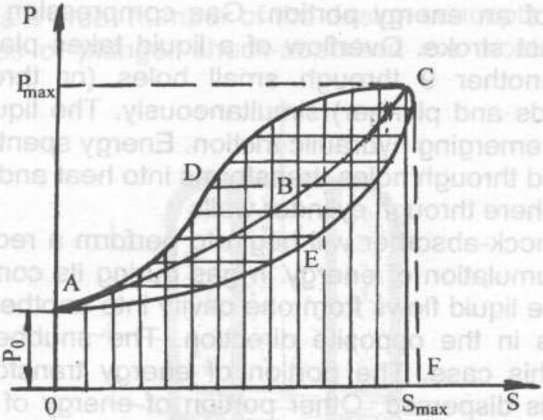

Fig. 9.17. Operation diagram of liquid-gas absorber

The area of OADCFO characterizes the absorbed energy. The area of ADCEA characterizes the dispersed energy, ADCBA is on impact stroke, ABCEA is on a recovery stroke. The relation of the area of ADCEA to the area of OADCFO characterizes a factor of a hysteresis. The coefficient of fineness of the chart η is determined as follows:

$$\eta = \frac{OADCFO}{P_{max} \cdot S_{max}}.$$

The value η depends on a shock-absorber structure and properties of working fluid. Usually $\eta = 0.7$ through 0.85. The value η can be increased if a preliminary effort P_0 is created inside a shock-absorber. The effort P_0 allows to reduce a stroke of a shock-absorber during absorption of the same operation.

Liquid-spring shock-absorber

Whole internal cavity is filled in with a liquid in a liquid-spring shock-absorber. The liquid is both elastic body and damping one. The volume of internal cavity is reduced to value of a volume of a rod, which is telescoped inside of the cylinder during a shock-absorber deflection. In this case the fluid pressure increases. The pressure between differential occurs in top and bottom cavities of a shock-absorber. As a result a liquid flows through holes. In this case it is heated as well as in a liquid-gas shock-absorber.

The liquid-spring shock-absorber operates at very high pressures. The maximum pressure reaches ***300*** through ***500*** MPa. That is why providing reliable seal causes special difficulties.

There is no preliminary charging (***P_0=0***) in a liquid-spring shock-absorber. Coefficient of completeness of the chart is higher than for liquid-gas one (***η=0.9***). That is why the liquid-spring shock-absorbers have smaller mass and general dimensions. The special compressed mixtures of liquids, which can compress approximately for ***15%***, are necessary for such shock-absorbers.

Chapter 10. AIRPLANE FLIGHT CONTROLS

Airplane control **is intended** for providing desired flight path and controlling its units and parts. The combination of airborne devices is called the airplane control systems. The complex of systems and devices, which enable the airplane controls to operate for changing the flight condition (path) or stabilizing on desired regime, is called the **main airplane control**. The devices, which are designed for controlling different airplane units (landing gear, flaps, shutters, trimmers, spoilers, brakes and so on), are called **auxiliary**.

A pilot is the main link in non-automatic control systems. He perceives the information about the attitude of the airplane in space, acting g-loads, forces on the control surfaces and their positions. On this basis he takes decision and produces corresponding controlling actions on the cockpit input levers. Therefore, special requirements to the main control system account capabilities and features of pilot's work.

Main **requirements** to stated systems:

– while controlling the airplane, the motion of pilot's legs and arms for deflection of cockpit input levers must meet the natural reflexes of a man with his balance being kept: displacement of the cockpit input lever in certain direction must cause the airplane travel to the same direction;

– airplane response to the cockpit input lever deflection is to have negligible lag;

– while deflecting the controls (control surfaces), forces on the cockpit input levers are to be increased smoothly, to be directed to the opposite side from the lever displacement direction. The ultimate forces on the input levers are stated in corresponding standards;

– the independence of control surfaces action must be provided. For example, aileron deflection must not cause the elevator deflection (they have a common cockpit input lever);

– the angles of control surfaces deflection must provide flight capability of the airplane at all flying and landing modes, here the margin of the control surface deflection must be provided;

- jamming probability of linkage and control mechanisms must be excluded;
- linkage and control mechanisms must allow adjustment;
- linkage must not get into resonance oscillations;
- linkage must have minimum friction and plays;
- presence of the serviceability test systems during flight;
- automatic switching on the duplicated circuits and units in case of failures;
- all linkages of members and mechanisms and they themselves must be accessible for maintenance;
- ultimate positions of the control surfaces and also cockpit input levers must be restricted by stops;
- possibility of change over to manual control on all modes of flight (if there is automatic equipment in control system).

Control system composition

We already considered the main control systems when we cited the requirements but let's cite once more:

- cockpit input levers, to which a pilot acts directly, applying forces to them and advancing them;
- control linkage, which connects the cockpit input levers with controllable units;
- actuating devices, special mechanisms, automatic devices;
- controls (control surfaces – ailerons, elevators and rudders, interceptors, all-movable stabilizers and fins).

Control system classification

The control system classification is carried according to some criteria.

According to **the method of producing the command impulses**:

- non-automatic. In this case the command impulses are produced by a pilot;
- semi-automatic. In this case the command impulses are produced by both pilot and automatic devices;

- automatic. The command impulses are produced by the automatic devices without pilot's participation.

According to **the action method on the command controls** the control is divided into manual and foot.

The **manual control** is carried out by means of:

- stick;
- control column stick;
- control wheel;
- stick in an arm-rest of a pilot's seat;

Foot control is performed by means of the pedals:

- lever-parallelogram;
- slipping;
- swinging.

According to the **linkage type**:

- mechanical;
- electrical-remote;
- on the fiber optics base;
- hydromechanical.

In its turn, mechanical system has the following varieties of linkage:

- push-pull;
- flexible;
- push-pull / cable.

According to **the type of force** action on the control surfaces:

- direct;
- indirect.

In its turn, indirect control system has the following varieties:

- power-boost (reversible);
- power-operated (irreversible);
- power-operated control system with possible change over to the direct manual control.

Cockpit input levers

The cockpit input levers of the control systems are arranged in the cockpit and includes the manual control (stick or control wheel with a control column) and foot control (pedals).

The **control stick**, which is used on the light and maneuverable airplanes, has two degrees of freedom. Hinged

The **control wheel with a control column** is applied on non-maneuverable airplanes (Fig. 10.3, where 1 – control column, 2 – control wheel, 3 – aileron control lever, 4 – control column attachment lever, 5 – elevator control lever, 6 – horizontal shaft). During **pushing** the control column the airplane will descend, during **pulling** it will ascend. If the control wheel turns to the **left** or to the **right**, corresponding rolls of an airplane will be gained.

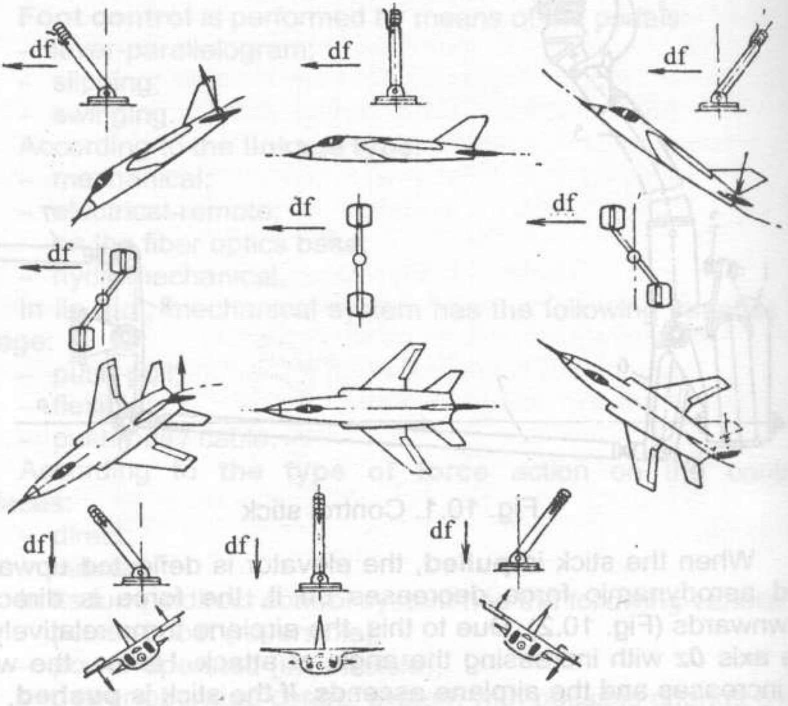

Fig. 10.2. Deflection of command levers and possible maneuvers of an airplane

The levers and control buttons of different units (trim tabs, drag flaps, armament, radio and other devices) are closely attached on the stick and on the control wheel.

Creation of forces and moments for airplane directional control (relatively to the axis ***0y***) is carried out by means of

pedals. In this case the rudder (or vertical tail unit in a whole) is deflected to the right or to the left turning the airplane to corresponding side.

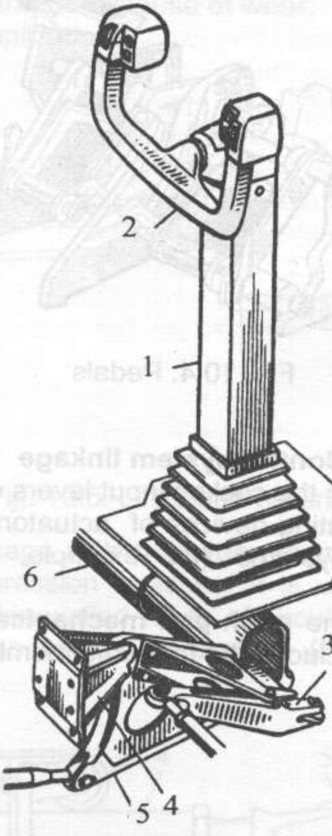

Fig. 10.3. Control column

The control pedals, which move in horizontal plane (with parallelogram mechanism and slipping), differ according to structure. They are mainly used on maneuverable, light and sport airplanes. There are pedals, which swing in vertical plane (Fig. 10.4) and are widely used.

On the ground the pedals can control the wheel brakes.

On most airplanes and helicopters (with the exception of maneuverable and small) the dual control is installed, i.e. cockpit input levers are duplicated. This allows the plane to be piloted by two pilots.

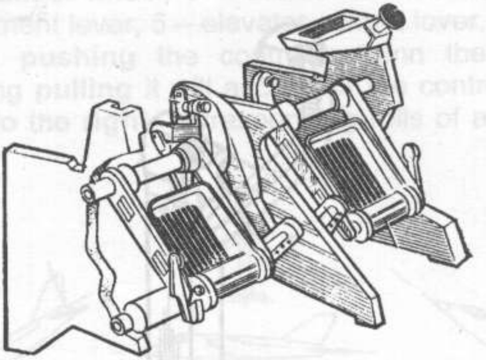

Fig. 10.4. Pedals

Control system linkage

The linkage links the cockpit input levers directly with control surfaces or with boosting devices of actuators .The actuators of automatic control systems (for example, autopilot)are also included to it.

Let's consider the **push-pull mechanical control linkage**. In common case it includes the following members:

- rods;
- shafts;
- bellcranks;
- levers;
- brackets;
- guiding devices.

There are two types of push-pull linkage:

- with transitional motion of rods;
- with rotary motion of rods and shafts.

Advantages of the push-pull linkage (in comparison with flexible mechanical linkage):

- less friction in linkage;
- less spring back;
- absence of elastic play;
- operations in both directions.

Disadvantages of push-pull linkage:

- it is difficult to compensate deformation of the unit structure, where the linkage passes;
- play appearance because of wear;
- layout complication.

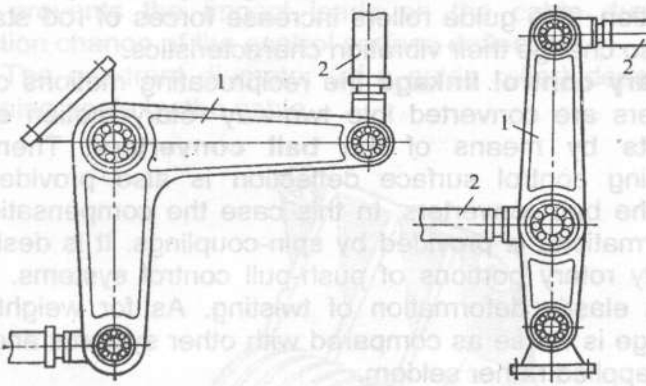

Fig. 10.5. Links and bellcranks

Push-pull linkage with **transitional motion** of rods carries tension and compression stresses. It is usually carried out as separate rods of thin-walled tubes of circular section. The tubes are hinged on the **levers-bellcranks** (Fig. 10.5, where 1 – bellcrank, 2 - rods).

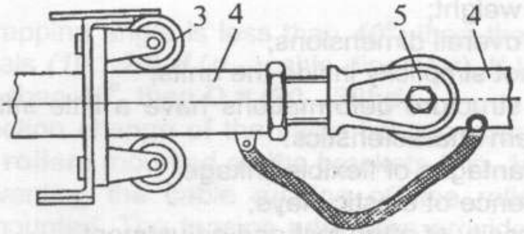

Fig. 10.6. Fairleads

The rods may be of invariable or variable length (for possibility of system adjustment). For the rods of variable length even if one control rod end is made adjustable (Fig. 10.6, where 3 – guide roller, 4 – rods, 5 – adjustable rod end).

There must be spherical bearings in the rod ends. All linkage bonding is also obligatory.

In case of need the rods are installed into special guide rollers. They are also called fairleads (ref. Fig. 10.6, i. 3). To reduce rod wear the guide rods are manufactured of polymer materials. Even if one roller must obligatory be adjustable in radial direction. The guide rollers increase forces of rod stability loss and also change their vibration characteristics.

In **rotary control linkage** the reciprocating motions of the control levers are converted into two-way rotary motion of the **rods shafts** by means of the **ball converters**. Then the corresponding control surface deflection is also provided by means of the ball converters. In this case the compensation of linear deformations is provided by spin-couplings. It is desirable not to apply rotary portions of push-pull control systems. They have great elastic deformation of twisting. As for weight, the rotary linkage is worse as compared with other systems and that is why it is applied rather seldom.

The **flexible control linkage** includes:

- cables;
- quadrants;
- guide rollers;
- turnbuckles;
- cable tensioners.

Advantages of flexible linkage (as compared with pull-push one):

- less weight;
- less overall dimensions;
- gasket simplicity inside the units;
- unit structure deformations have a little influence on the control system characteristics.

Disadvantages of flexible linkage:

- presence of elastic plays;
- necessity of often test and adjustment
- great friction forces;
- considerable member wear.

The flexible linkage carries only tension and consists of direct and reverse branches. Special flexible **cables** are usually used in it. The cables are not untwist, but metal strip and wire can also be applied. The cables are manufactured of high-strength steel. The cable ends are installed into the **rod ends**. Connection of two cables ends and linkage tension are provided by the **turnbuckles**.

Instead of bellcranks the **quadrants** are used in the flexible system. The quadrants provide the constancy of cable length. This prevents the impact loads on the cable during sudden direction change of the control surface deflection.

The quadrant diameter (of a guide roller) depends on the wrapping angle by the cable.

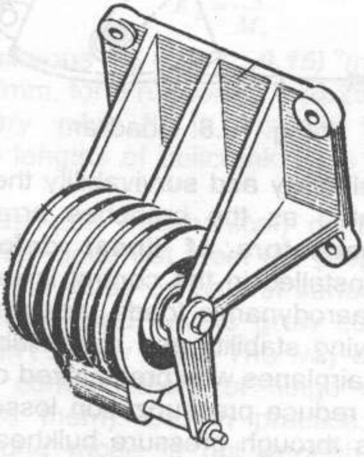

Fig. 10.7. Guide rollers

If the wrapping angle is less than ***40°***, then the quadrant ***D*** diameter equals ***(10...20) d*** (***d*** – cable diameter). If the wrapping angle is more than ***40°***, then ***D = (20...30) d***.

The direction change of the cable linkage is carried out by means of the **rollers** mounted on the brackets (Fig. 10.7).

For preventing the cable running off the rollers the side limiters are mounted. The tension **adjusters** provide the tension constancy of the cable control linkage at ambient temperature changes. They support the cable tension with force ***20...80*** daN (Fig. 10.8).

The flexible linkage may be applied to those control systems where low forces act; i.e. on light airplanes and on the airplanes with indirect system too. The flexible linkage may be applied as a stand-by (in case of applying non-mechanical control systems).

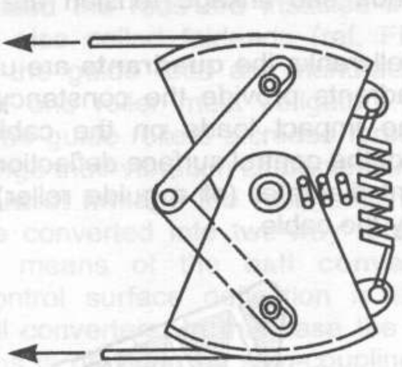

Fig. 10.8. Quadrant

To improve reliability and survivability the control linkage is sometimes duplicated as the branches arranged on different sides. The **compensators of linear deformations** of A/C structure may be installed in the control linkage. It may include the simulators of aerodynamic loads, actuating mechanisms of systems for improving stability and controllability characteristics and so on. On the airplanes with pressurized cabins the pressure **seals** are fitted to reduce pressurization losses in places where the linkage passes through pressure bulkheads. As a result all mechanical linkages have to be made multipartite and with great number of hinges and joints resulting in reducing its reliability and survivability in the end.

Sometimes, it is expedient to apply the mixed linkage system.

Control system types

In **direct system** the control process occurs by means of muscular pilot's force. He deflects the controls overpowering hinge moments on the control surfaces. This provides appearance of forces and moments to change the flight modes.

The force, which must be applied to the cockpit input levers, must be within the man's physical efforts. It is determined by special standards. To provide normalized force the system linkage is to have certain value of one its characteristics. We already know this characteristic. It is gearing ratio K_S. Let us cite once more the condition of operation quality on the cockpit input lever and control surface:

$$P_L dx_L = M_S d\delta_S$$

$$P_L = M_S \frac{d\delta_S}{dx_L} = M_S K_S$$

From this expression, with P_L (normalized value of the force on the cockpit input lever) and M_S (maximum value of hinge moment of the control surface) being known, K_S is determined:

$$K_S = \frac{P_L}{M_S}.$$

Usually for ailerons $K_S = (0.1...0.15)$ °/mm, for an elevator $K_S = (0.1...0.15)$ °/mm, for a rudder $K_S = (0.25...0.4)$ °/mm.

The necessary value K_S is provided by determining the relationship of the lengths of bellcrank arms and control system levers.

Described push-pull (mechanical) control system linkage more and more often does not meet the proposed requirements now. At one time, the loads on control surfaces began to grow. The forces on cockpit input levers grew correspondingly, with which a pilot couldn't simply cope. The way out was searched in applying different compensators of hinge moment (we have already considered them). But in practice, it turns out that compensation in one mode is not enough and on others is excessive. Such and other complications (increasing the control system weight, its complexity, corresponding reliability reduction and so on) resulted in appearing a great number of compensation force systems, but they did not solve the problem radically.

If the control process is provided by a pilot by means of mechanisms and devices which facilitate the control process and improve its performance, then such system is called **indirect**. In this case the control surfaces deflection takes place by means of boosting mechanisms (booster or actuator). A pilot produces command impulses to the boosters (actuators).

As it was already noted, there are three types of indirect systems: reversible, irreversible and irreversible with transition to direct control.

Reversible system

In this case the main portion of the control surface hinge moment is balanced by a booster. And negligible portion of force is transmitted to a cockpit input lever to organize the feedback of force (Fig. 10.9, where 1 – cockpit input lever, 2 – booster (actuator), 3 – crossover device, 4 – control surface, 5 – trimmer, 6 – trimmer control, 7 – hydraulic system).

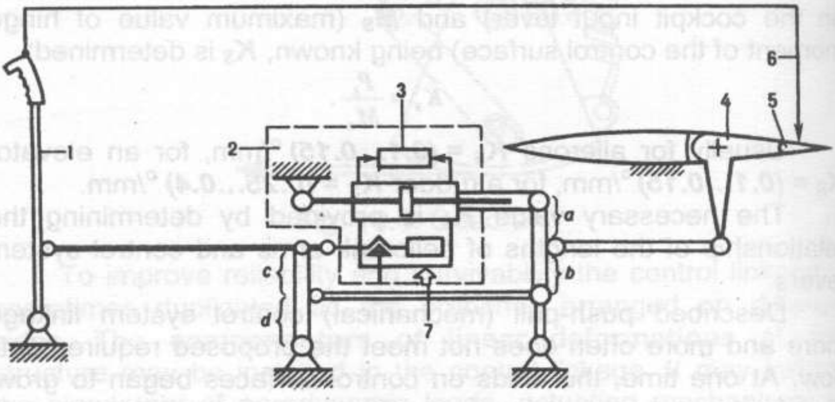

Fig. 10.9. Reversible control system

Advantages of the reversible system (as compared with irreversible one):

- pilot may dose the controlling impulses according to force;
- self-controlling differs little from usual direct one.

The composition of the reversible system differs negligibly from that of usual direct system. Only a booster is added.

The usual aerodynamic trimmers are used to remove forces on the control lever during prolonged flight under steady conditions.

The standards of maximum forces and transitions of cockpit input levers in indirect systems are the same as in direct ones.

Irreversible system

Reversible system is rational only at subsonic speeds. During changing subsonic speeds to supersonic ones the hinge moment changes not only by value but also by direction.

Therefore, the feedback on force will not assist the airplane to be controlled, but on the contrary to prevent it.

On such airplanes the irreversible system is used. In this case all hinge moment is balanced by a booster (Fig. 10.10, where 1 – cockpit input lever, 2 – booster, 3 – control surface, 4 – hydraulic system, 5 – load feel unit, 6 – trim actuator, 7 – trim actuator control, 8 – transmission ratio control mechanism).

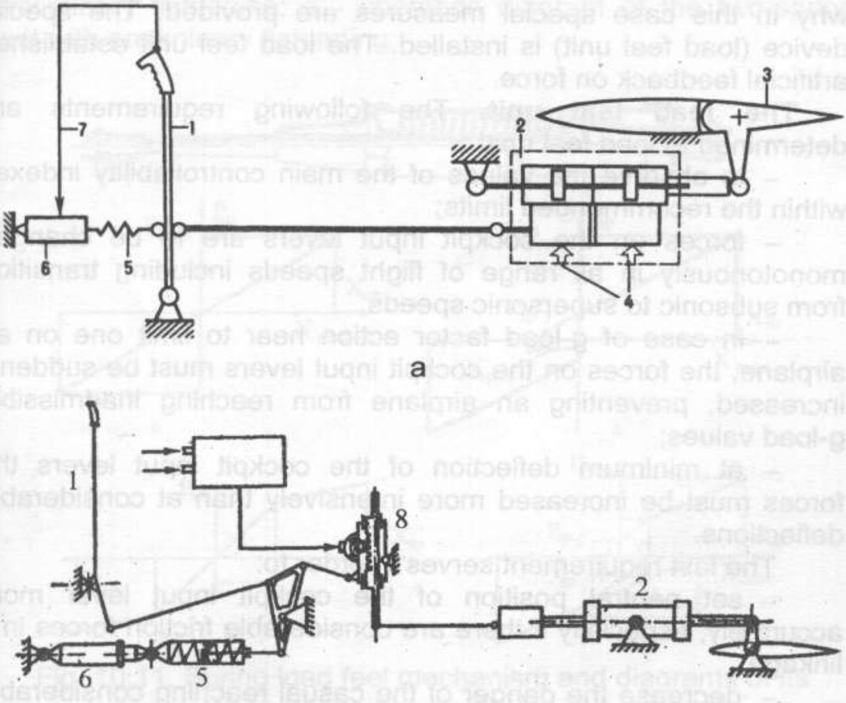

Fig. 10.10. Irreversible control system

Applying the irreversible system enabled:

– to provide low forces of airplane control in all range of flight modes;

– to get possibility of applying different automatic devices used for providing predetermined stability and controllability characteristics;

- to use the controls without aerodynamic compensation of hinge moment;
- to exclude the application of trimmers for balancing;
- to provide anti-flutter characteristics without cargoes by means of an actuator (booster).

In this case the force on the cockpit input lever does not depend on the value of the hinge moment (angle of deflection) of the control surface. This complicates the airplane control, that is why in this case special measures are provided. The special device (load feel unit) is installed. The load feel unit establishes artificial feedback on force.

The load feel unit. The following requirements are determined to load feel unit:

- to observe the values of the main controllability indexes within the recommended limits;
- forces on the cockpit input levers are to be changed monotonously in all range of flight speeds including transition from subsonic to supersonic speeds;
- in case of g-load factor action near to limit one on an airplane, the forces on the cockpit input levers must be suddenly increased, preventing an airplane from reaching inadmissible g-load values;
- at minimum deflection of the cockpit input levers the forces must be increased more intensively than at considerable deflections.

The last requirement serves in order to:

- set neutral position of the cockpit input lever more accurately, especially if there are considerable friction forces in a linkage;
- decrease the danger of the casual reaching considerable g-load factors at great values of dynamic pressure.

Standards of maximum forces and cockpit input lever deflections in this system are the same as in usual direct system. This allows to keep the airplane control skill during transition from one system to another. In addition to the main control skill is kept while changing airplanes.

According to the structure the load feel units are divided into:

- spring;

– pneumatic;
– hydraulic.

The diagram and characteristics of a single-spring and two-spring load feel units are given in Fig. 10.11, where a – diagram of the single-spring load feel unit, b – operation diagram of the single-spring load feel unit without preliminary spring tightening; c – operation diagram of the single-spring unit with preliminary tightening, d – operation diagram of the two-spring unit without preliminary tightening; e – operation diagram of the two-spring unit with preliminary tightening.

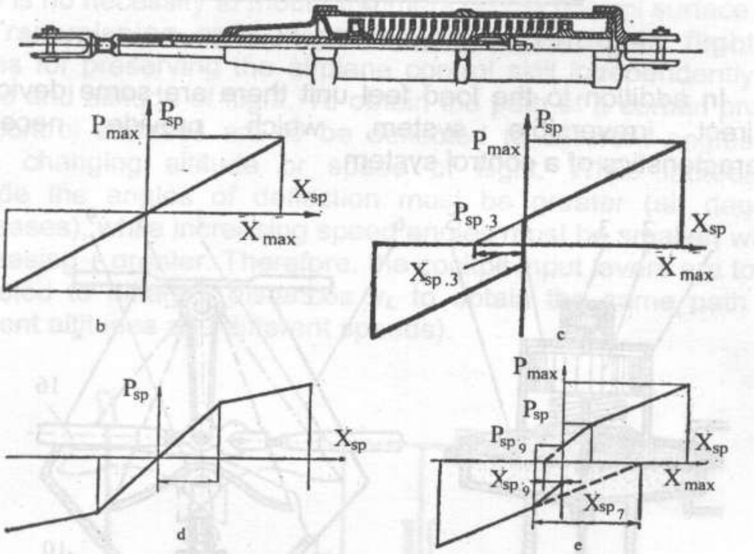

Fig. 10.11. Spring load feel mechanism and diagrams of its operation

The diagram of the **pneumatic** load feel unit is given in Fig. 10.12, where 1 - cockpit input lever, 2 – cam, 3 – bellows, 4 – lever, 5 – axis of cam rotation.

The diagram of the **hydraulic** load feel unit is given in Fig. 10.13, where 1 - controller body, 2 – weight, 3 – damper space, 4 – spring, 5 – diaphragm, 6 – cam body, 7 – rod to the cockpit input lever, 8 – lever, 9 – cam, 10 – piston, 11 – hydraulic power cylinder, 12 – hydraulic space of a controller, 13 – orifice rod, 14 – pump line, 15 – safety valve, 16 – rod to a booster (actuator).

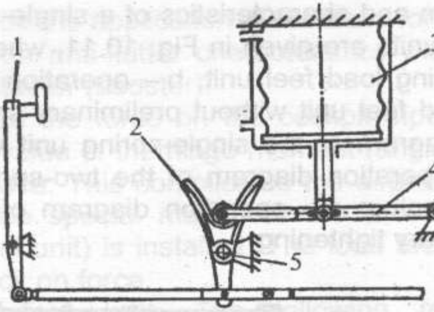

Fig. 10.12. Pneumatic load feel mechanism

In addition to the load feel unit there are some devices in indirect irreversible system, which provide necessary characteristics of a control system.

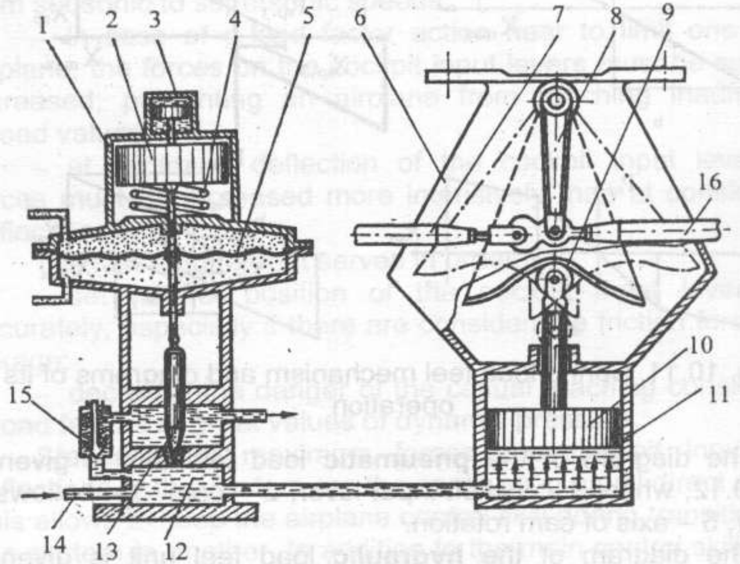

Fig. 10.13. Hydraulic load feel mechanism

Trim actuator. It serves for deflecting and keeping the control surface in deflected position (through a booster) with balancing being changed. In case of changing balance characteristics on any channel, a pilot produces command impulses to the trim actuator. The trim actuator advances the load feel unit to either side. The load feel unit displaces a slide valve of the booster by means of a linkage (ref. below). The slide valve in its turn causes the booster to displace which deflects the control surface to necessary direction and angle. The booster will hold the control surface in such position until new signal from the trim actuator enters. While controlling the airplane (cockpit input lever deflection), controlling signal will deflect the control surface from new neutral position set by the trim actuator. Therefore, there is no necessity to mount trimmers on the control surface.

Transmission ratio control mechanism K_S in flight. It serves for preserving the airplane control skill independently on speed and altitude of flight. To obtain the path of a certain profile the control surfaces are to be deflected to different angles δ_S while changing altitude or speed of flight. While increasing altitude the angles of deflection must be greater (air density decreases), while increasing speed angles must be smaller, while decreasing – greater. Therefore, the cockpit input levers are to be deflected to different distances x_L to obtain the same path (at different altitudes and different speeds).

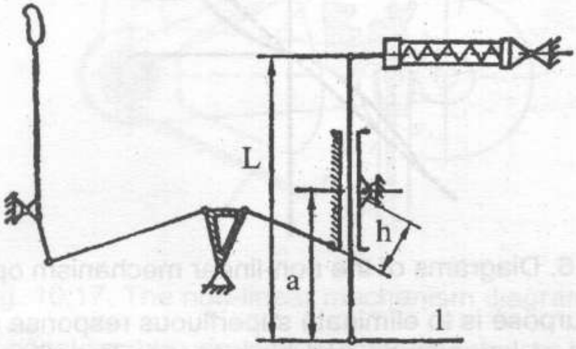

Fig. 10.15. Mechanism diagram of transmission ratio gear

If the dependence (known to us) is used to determine transmission ratio

$$\frac{d\delta_s}{dx_L} = K_s,$$

then it is possible to find

$$dx_L = \frac{d\delta_s}{K_s}.$$

Thus, changing K_S it is possible to obtain constancy of value x_L with variable values δ_s in this case the same displacements input levers will cause the same changes of airplane path independently on altitude and speed of flight (dynamic pressure). The change of transmission ratio is performed by automatic devices.

The mechanism diagram, which changes transmission ratio simultaneously to the control surface and load feel unit, is given in Fig. 10.14, where 1 – the rod to the booster (actuator).

Non-linear mechanism. It is intended for changing the transmission ratio K_S near neutral position of the cockpit input lever (and correspondingly, neutral position of the control surface).

Fig. 10.16. Diagrams of the non-linear mechanism operation

The purpose is to eliminate superfluous response of controls during flight at low altitude and high speed. The dependence of the control surface deflection δ_S on the cockpit input lever displacement x_L is given in Fig. 10.16, where 1 – dependence without non-linear mechanism, 2 – dependence with non-linear mechanism.

When flying at low altitudes at high speeds, the dynamic pressure has great values. Therefore, the control surface angles necessary for airplane control are negligible. The displacements of the cockpit input levers must be short correspondingly. When the displacements being short, it is complicated to dose the command impulses accurately. The non-linear mechanism increases necessary displacements of the cockpit input levers (near the neutral position), which correspond to low angles of control surface deflection.

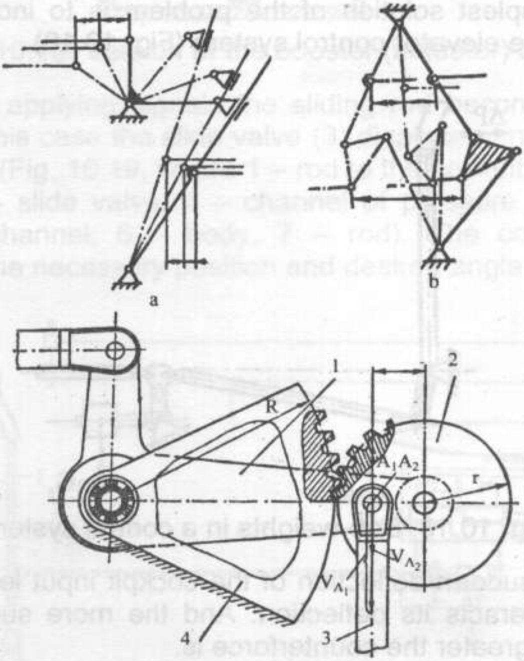

Fig. 10.17. The non-linear mechanism diagram

Thus, considerable airplane displacements are eliminated which may be caused by casual displacements of the cockpit input lever near neutral position. And considerable airplane displacements downwards are very dangerous while flying at low altitude.

Non-linear mechanisms may be performed according to different diagrams. Some of them are given in Fig. 10.17.

Mechanism of preventing an airplane from getting into non-ultimate **g**-load factors. One of the reasons of getting an airplane into inadmissible **g**-load factor is sudden deflection "pull out" of the cockpit input lever by a pilot at high-flight speed. In this case an elevator (all movable stabilizer) is suddenly deflected. The force also increases suddenly on it, which may cause action of **g**-load factor on an airplane. The **g**-load factor is greater than maximum operational one.

The simplest solution of the problem is to include a bob-weight into the elevator control system (Fig. 10.18).

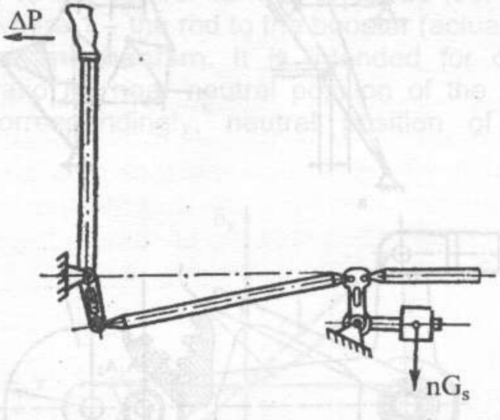

Fig. 10.18. Bob-weights in a control system

During sudden deflection of the cockpit input lever the bob-weight counteracts its deflection. And the more suddenly lever deflects, the greater the counterforce is.

The second way of solving this problem is to mount the load feel units with increased force gradient in the beginning of compression (near neutral position).

Besides, the additional load feel unit may be included into the elevator control system. The load feel unit prevents sudden deflections of the cockpit input lever.

Sliding rods are included in the control linkage of the control surface for applying command impulses of damping systems. In principle the signals from automatic control systems may enter them.

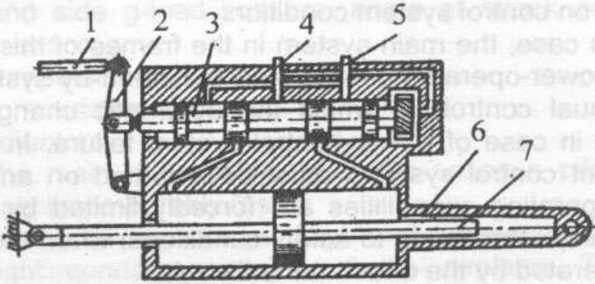

Fig. 10.19. Version of the booster (actuator) design

During applying signals the sliding rod becomes longer or shorter. In this case the slide valve (3) displacement of a booster takes place (Fig. 10.19, where 1 – rod to the cockpit input lever, 2 – lever, 3 – slide valve, 4 – channel of pressure delivery, 5 – discharge channel, 6 – body, 7 – rod). The control surface deflects to the necessary position and desired angle accordingly.

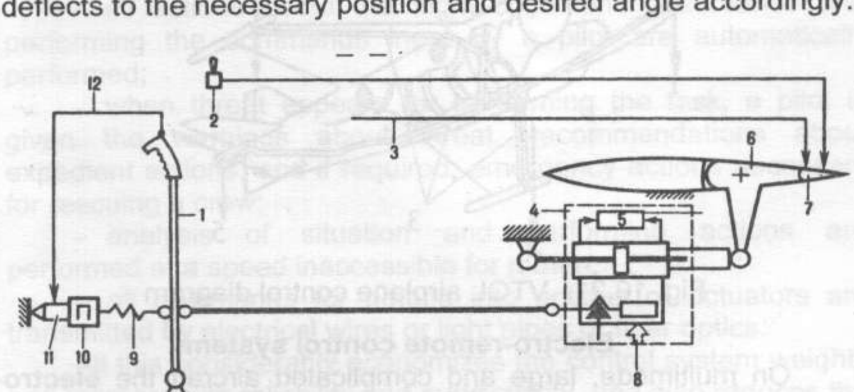

Fig. 10.20. Powered control with transition to manual control

The system of **power-operated control with change-over to the direct manual control** (Fig. 10.20, where 1 – cockpit input lever, 2 – trimmer control button in the direct control mode, 3 – trimmer control in irreversible mode, 4 – booster, 5 – cross-over device, 6 – control surface, 7 – trimmer, 8 – hydraulic system, 9 – load feel unit, 10 – load feel unit disengagement device, 11 – trim actuator, 12 – trim actuator control) is practically the combination of two previous control systems, which are used in turn depending on control system condition.

In this case, the main system in the frames of this structure is that of power-operated control, and the stand-by system is the direct manual control, to which the automatic change-over is carried-out in case of power-control system failure. In this case two different control systems must be actuated on an airplane. Airplane operating capabilities are forcedly limited by the flight mode envelope according to safety conditions, when the airplane may be operated by the direct manual control.

On **vertical take-off and landing airplanes** (VTOL) the special jet control is used to provide the hover mode controllability (Fig. 10.21, where 1 – pitch, 2 – roll, 3 – plumbing, 4 – roll, 5 – pitch and heading).

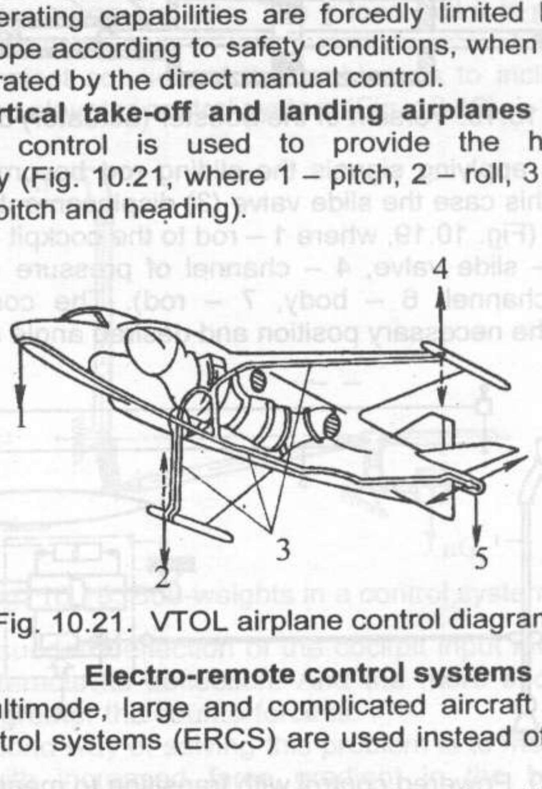

Fig. 10.21. VTOL airplane control diagram

Electro-remote control systems

On multimode, large and complicated aircraft the **electro-remote** control systems (ERCS) are used instead of mechanical ones.

Now such systems are rapidly developed and force out the old mechanical control systems.

The typical system of electro-remote control includes the following main members:

– the displacement transducers of the cockpit input levers in the cockpit (in some cases – force transducers);

- the transducer of airplane movement parameters (in the first place the pitch rate gyros, roll rate gyros and yaw rate gyros, normal and side g-load sensors, angle of attack sensors and side-slip sensors);
- computer;
- commutation devices;
- actuators.

In the main, the system operates so as a pilot operated before, only incomparably faster:

- numerous sensors perceive and process the information about flight conditions, status of the airplane. The system includes the information about dynamic pressure, flight altitude and speed, Mach number, engine power ratings and many other data. The amount of input data is inaccessible for its mastering by a person. Only that information, which warns of deviation from normal operating conditions, is shown on the display screen. Of course, any necessary information may be given according to special request of a pilot;
- all actions about the flight conditions observance and performing the commands input by a pilot are automatically performed;
- when threat appears for performing the task, a pilot is given the warnings about threat, recommendations about expedient actions, and if required, emergency actions necessary for rescuing a crew;
- analysis of situation and performing actions are performed at a speed inaccessible for a man;
- all commands for putting into actions of actuators are transmitted by electrical wires or light pipes or fiber optics.

All this considerably economizes the control system weights and increases its reliability and survivability, and also reduces the system maintenance manpower.

High reliability requirements are made to the ERCS, since such systems failure leads to the total loss of stability and controllability of an airplane, i.e. catastrophic consequences.

High reliability level is achieved by sparing and duplication the main channels and system members. In practice the 3-fold or 4-fold sparing is used. The special built-in test circuits are also installed. It compares the signals of all control system channels and gives the command to switch off the faulty one.

Each channel has independent electrical power. The interruption of power supply is not allowed when one of the power sources fails.

In connection with introduction of electrical systems, the control stick changes the location. In the ERCS the comparatively small side control stick may be enough, which is built in a pilot seat.

In these systems the transmission of controlling commands is generally provided by electrical communication lines. Refusal from purely mechanical control linkage and necessity of transition to the ERCS are stipulated by introduction of automation in the loop of the airplane manual control.

Control automation enables to provide not only optimal controllability and stability characteristics of an airplane but to improve its performance considerably. It is achieved due to using the aerodynamic configurations with low longitudinal margin or statically unstable aerodynamic configurations at subsonic flight speeds. It gives possibility, for example, to reduce the stabilizing and controlling surfaces area (i.e. to reduce weight and drag); to increase lift-drag ratio by more rational aerodynamic force distribution between a wing and control surface, and also to reduce structural loads.

Thus, the main advantages of the ERCS as compared to usual hydromechanical systems:

- there are no temperature displacements of linkage;
- transmission accuracy of controlling signals does not depend on airplane size;
- bending and torsion vibrations of airplane structure do not influence the booster and control surface operation;
- damping the control surface oscillations is provided by simple means;
- electrical decoupling of the control and stability channels, operating in parallels, is provided by elementary means;
- it is simple enough to carry on different rework and modifications while operating;
- high reliability due to installation of ***3-4*** channels unconnected between themselves;

- test is carried out automatically;
- negligible manpower for maintenance and repair;
- possibility of partial duplicating: elevators – by ailerons, ailerons – by elevators.

Some features of control systems

Aileron control.

In order that the control surface angles would be the same while the cockpit input levers being deflected to different sides to the same distances, the condition is to be carried out: angles between axes of rods and bell-crank arms are to be equal to ***90°*** on all linkage channel. But for ailerons, as it has already been said, the deflection angles are to be different: downwards – the angles are less, upwards – the angles are greater (ref. chapter "Ailerons").

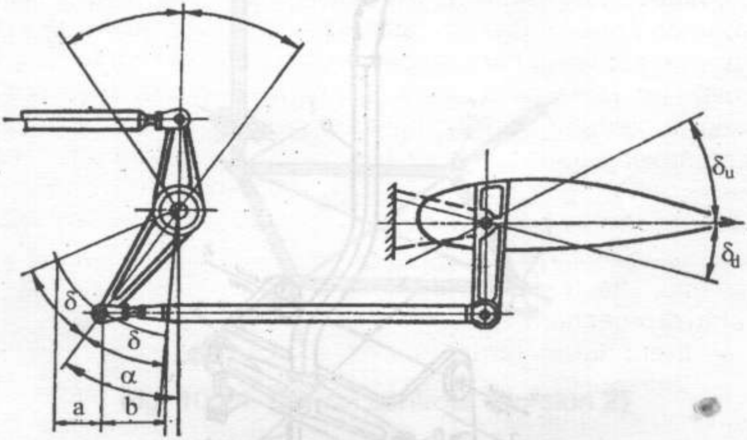

Fig. 10.22. The differential ailerons control

For this purpose differential aileron control is applied. It is provided by mounting the differential bell-crank in front of ailerons. In such bell-crank the angle between the rod, which is in the circuit, from the cockpit control rod (in input) and the bell-crank arm is equal to ***90°***. The angle between the rod and the arm in the circuit, which passes to the aileron (in outlet), is not equal to ***90°*** (Fig. 10.22.).

In this case when deflection angles of the bell-crank arm in inlet $\boldsymbol{\delta}$ "to the left – to the right" are equal, the deflection angles of the bell-crank arm "to the left – to the right" in outlet will also be equal between themselves. But in outlet the linear displacements of the rod "to the left – to the right" will not be equal between themselves ($\boldsymbol{b > a}$). Accordingly, and the aileron deflection angles upwards $\boldsymbol{\delta_n}$ will be greater than the deflection angles $\boldsymbol{\delta_d}$ downwards.

Sometimes differential bell-cranks are used for interceptor deflection.

Elevon control.

As it is known, the elevons are control surfaces on "tailless" airplanes. They perform the functions of the elevators and ailerons at the same time. Let's cite two possible diagrams of the elevon control.

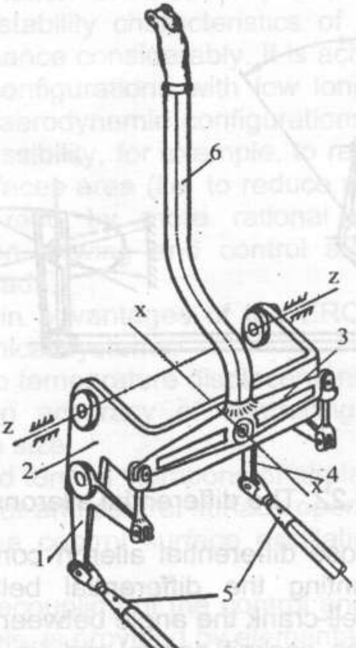

Fig. 10.23. Elevon controls (version 1)

In Fig. 10.23 the first diagram is shown. The control stick 6 together with the cross piece 3 may turn relative to the axis x-x "to the left – to the right". In this case the levers 1 and 4 and the rods 5 displace to different sides. Hence, and the elevons deflect to different sides (operate as ailerons).

If we revolve the stick 6 about the axis ***z-z*** "pull-push", then the base 2 and the cross-piece 3 will rotate together with it. The rods will be deflected to one side and elevons will be deflected to one side (operate as elevators).

In Fig. 10.24 another diagram of elevon control is shown. When the stick is deflected "pull-push", the hinges 2 and 4 close in or move away. In this case the rods deflect both elevons upwards or downwards (operate as elevators).

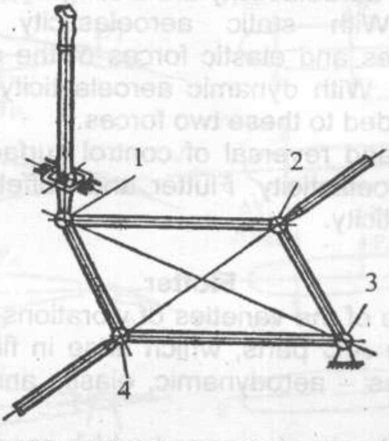

Fig. 10.24. Elevon controls (version 2)

While the stick being deflected "to the left – to the right" the hinges 2 and 4 also move to the left or to the right. The rods deflect the elevons to different sides (operate as ailerons).

Chapter 11. AEROELASTICITY

With increasing the speeds it turned out that it is necessary to study not only the aircraft dynamics, but the behaviour of separate its units in flight, which sometimes possess rather low stiffness. The interaction of elastic deformation of an aircraft and its performance had to be studied. Aeroelasticity is the section of aeromechanics, which unites the combination of the methods determining the influence of joint action of aerodynamic forces and the elastic forces of structural flexibility on the aircraft stability and controllability.

Two kinds of aeroelasticity are distinguished. They are static and dynamic. With ·static aeroelasticity two actions – aerodynamic forces and elastic forces of the structure itself act on the A/C units. With dynamic aeroelasticity the third force – inertial force is added to these two forces.

Divergence and reversal of control surfaces belong to the static kind of aeroelasticity. Flutter and buffeting belong to the dynamic aeroelasticity.

Flutter

Flutter is one of the varieties of vibrations-undamped elastic oscillations of the A/C parts, which arise in flight as a result of acting three forces – aerodynamic, elastic and inertial – on the structure.

Flutter may begin at a speed which reached some certain value – **critical flutter speed** V_{FL}. These oscillations do not require some periodic outer influences and can appear suddenly at steady flight in still air; casual initial impulse, even very small, will be enough.

There may be different flutter modes: wing flutter, tail unit flutter, flutter of fuselage and wing panels. Flutter may occur on the panels of the rocket bodies, on the helicopter main rotors, on the rotor blades, on the turbine blades and compressors. Ram airflow is the power source for oscillation. The dynamic forces in the A/C structure may quickly reach (sometimes during some seconds) breaking ones, resulting in the aircraft failure in flight. Therefore arising any flutter mode is inadmissible.

There are some flutter modes, in particular, for the wing and tail unit (horizontal and vertical) – **flexure-torsion and flexure control surface**.

Let's consider the flexure-aileron flutter. The cause is:

- line location of centers of aileron masses behind its axis of rotation;
- insufficient stiffness of the aileron control linkage;
- insufficient torsion stiffness of the wing;
- insufficient flexural stiffness of the wing.

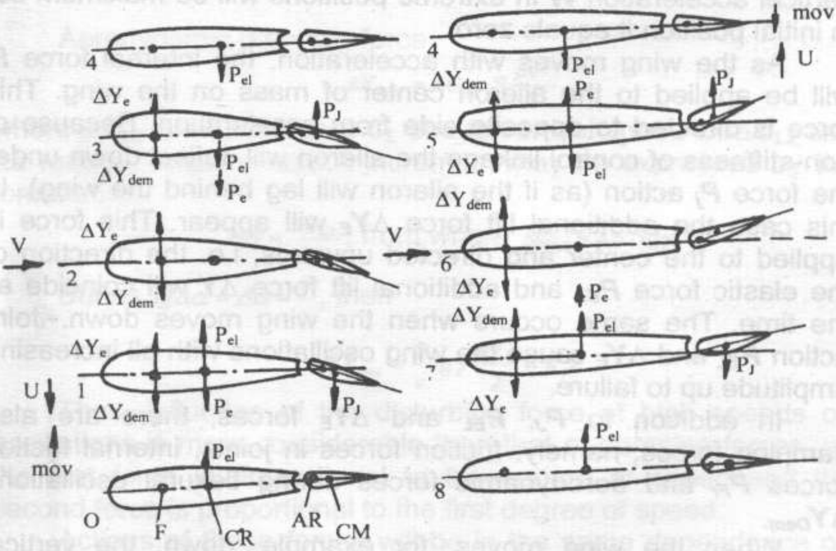

Fig. 11.1. Originating bending-aileron flutter

Flutter occurs while different parameters, stated characteristics being combined, and at a certain flight speed, called critical flutter speed. Necessary condition for exciting the oscillations of flutter type is exceeding the operation performed by the disturbing forces over the operation of damping forces.

Let's consider flexural wing oscillations with great torsion stiffness. The center of aileron masses is located **in front** of the axis of rotation (Fig. 11.1).

Let the wing deflect down under the action of disturbing force from initial position (dotted line). Then the disturbing force stopped its action and the wing is left to its own resources (O position in Fig. 11.1). For the sake of considering let's use the reciprocity principle of movement, i.e. let's suppose that the airplane is unmovable, and the airflow is running against it at the speed V.

From O position the wing will displace to the initial position under the action of elastic force P_{EL} applied in the flexural center. In this case the speed U of vertical displacement of the wing will accelerate from zero to maximum U_{max}. At the same time the vertical acceleration W in extreme positions will be maximum but in initial position it equals zero.

As the wing moves with acceleration, the internal force P_j will be applied to the aileron center of mass on the wing. This force is directed to opposite side from acceleration. Because of non-stiffness of control linkage the aileron will deflect down under the force P_j action (as if the aileron will lag behind the wing). In this case the additional lift force ΔY_E will appear. This force is applied to the center and directed upwards, i.e. the direction of the elastic force P_{EL} and additional lift force ΔY will coincide all the time. The same occurs when the wing moves down. Joint action P_{EL} and ΔY_E cause the wing oscillations with all increasing amplitude up to failure.

In addition to P_J, P_{EL} and ΔY_E forces, there are also damping forces, namely: friction forces in joints, internal friction forces P_{Fr} and aerodynamic forces during flexural oscillations ΔY_{Dem}.

When the wing moves, for example, down, the vertical speed U is added to the forward speed V (Fig. 11.2, a). In this case the angle of attack $\Delta\alpha$ increases and additional lift-force ΔY_{Dem} occurs (Fig. 11.2, b). This force is directed against moving, i.e. it prevents oscillations.

If action, being performed by the disturbing forces, is greater than that of damping forces, then the wing oscillation energy increases and flexure-aileron flutter occurs.

Aerodynamic disturbing force at given wing rigidities

$$\Delta Y_{dem} = \Delta C_L \cdot S \frac{\rho v^2}{2} = K_1 \cdot v^2,$$

where K_1 – the proportionality factor. The friction force P_{f2} does not depend on the flight speed.

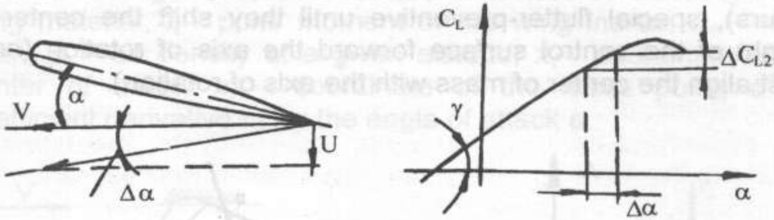

Fig. 11.2. Originating a damping force

Aerodynamic damping force

$$\Delta Y_{dem} = \Delta C_{L2} \cdot S \frac{\rho v^2}{2},$$

where ΔC_{L2} is an increment C_L due to vertical speed U. ΔC_{L2} and $\Delta\alpha$ ratio by angle of attack increment may be expressed by the formula

$$tg\gamma = \frac{\Delta C_{L2}}{\Delta\alpha}, \text{ from where } \Delta C_{L2} = \Delta\alpha \cdot tg\gamma.$$

But as $tg\Delta\alpha \approx \Delta\alpha \approx \frac{u}{v}$, then

$$\Delta Y_{dem} = \frac{u}{v} tg\gamma \frac{\rho v^2}{2} = k_2 v.$$

Thus, influence of the disturbing force at high speeds on oscillations is more considerable than that of damping forces, as the first force is proportional to the square of speed and the second force is proportional to the first degree of speed.

Actions of these forces will be in the same dependence on speed (Fig. 11.3).

The critical flutter speed corresponds to the point (a) in which the actions of disturbing and damping forces are equal. Beginning from this speed, the oscillations arisen as a result of the action of any casual force will increase without requiring external actions.

The aileron over-trimming, i.e. arranging the center of mass line forward the axis of rotation is positive for V^*_{FL},as the aileron at the same P_j will deflect to other side , and ΔY_E will also be directed opposite. Hence, ΔY_E in this case will be undisturbed but dumping, if on the designed control surface the center of masses is behind the axis of rotation (because of this phenomenon flutter occurs), special flutter-preventive until they shift the center-of-weight of the control surface forward the axis of rotation (or at least align the center of mass with the axis of rotation).

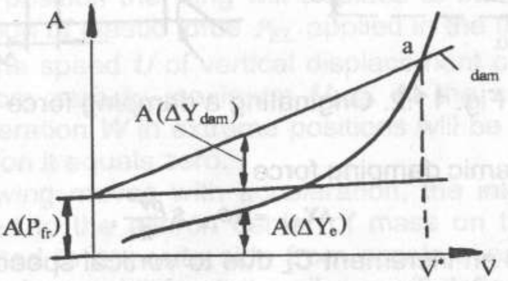

Fig. 11.3. Disturbing and damping forces actions

In this case the flexure-control surface flutter will not arise. And even on the contrary – in the case of arranging the center of mass forward the axis of rotation, aileron deflections will cause the appearance of damping aerodynamic forces. These forces will counteract the wing oscillations.

Flexure-torsion flutter is caused by insufficient flexural and especially torsion non-stiffness of the wing. The diagram of arising and action of the forces on the wing with flexure-torsion flutter is given in Fig. 11.4. Here P_j – the inertial force of the wing structure mass is applied in the center of mass of the wing.

Y is the disturbing aerodynamic force arising as a result of the wing twisting (for increasing the angle of attack). The force Y is applied in the center of pressure (focus). Twisting occurs under the action of P_j force relative to the elastic center of the wing. P_{EL} is the elastic force of the wing structure, which is applied in the flexural center (CR). The damping aerodynamic force is not shown here.

Critical speed of flexure-torsion flutter (Fig. 11.4) can be determined from the following formula:

$$V_{FL} = \sqrt{\frac{2GI_t}{l_w b \rho c_L^\alpha (x_t - x_F)}},$$

where ***b*** – wing chord, ***G*** – modulus of transverse elasticity of the wing material, ***I****t* – polar moment of the wing inertia, ***L****w* – wing span, ***p*** – air density at a given altitude, ***x****t* – coordinate of the center of mass, ***x****f* – coordinate of the focus point, c^α_L – coefficient derivative ***c****L* by the angle of attack ***α***.

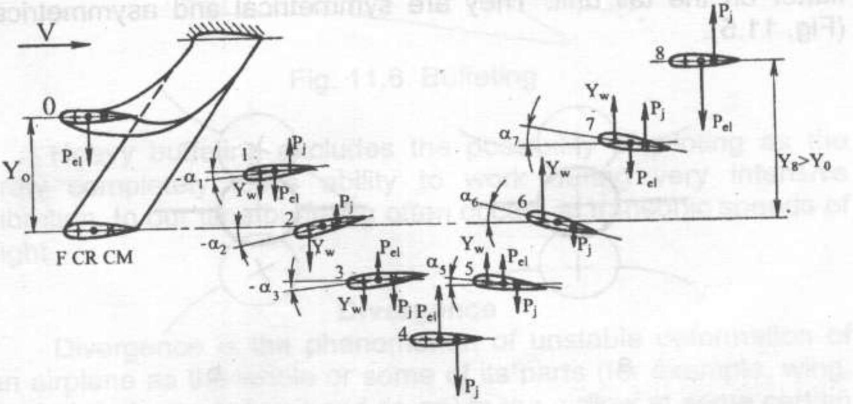

Fig. 11.4. Originating bending-torsion flutter

Thus, ***V****FL* increases with the growth of ***χ*** and reduction of ***λ*** too, and also with reduction of the distance between the center of mass and focus. The focus position (it is determined by aerodynamic characteristics), therefore, the task is to shift the center of mass as nearer as possible to the focus.

For reducing the probability of arising flexure-torsion flutter of the wing or tail unit the center of mass of units must also be shifted forward as far as possible. For example, if engines are arranged on the wing, they are already flutter-preventive weights.

Critical flutter speed may always be accelerated by changing the structural parameters, but it is usually connected with increasing structural mass.

Features of the tail unit flutter

There are more oscillation modes in the tail unit than in the wing because of the fuselage oscillations are put on the tail unit ones. In addition, the fuselage deformations may influence the control linkage. There may be deflections of control surfaces while linkage shifting. The forces, which will arise in this case, may deform the fuselage.

A closed circle arises. The fuselage deformations cause the control surface deflections, which cause the fuselage deformations. In this case very dangerous oscillations may occur.

In contradictions to the wing, there may be two types of flutter on the tail unit. They are symmetrical and asymmetrical (Fig. 11.5).

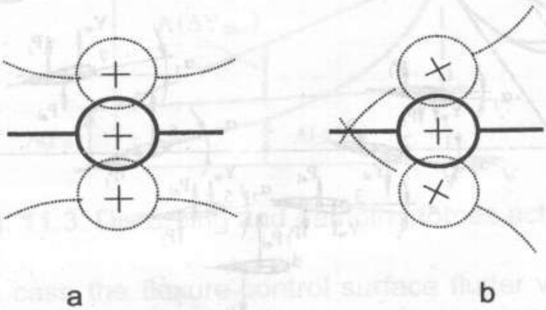

Fig. 11.5. Flutter of the tail unit

Measure of tail unit flutter abatement:

- increasing the torsion and flexural stiffness of the tail unit;
- increasing the torsion and flexural stiffness of the fuselage
- mass balancing of the tail unit and control surfaces;
- choosing the rational shape of the tail unit.

Buffeting

Forced oscillations of a whole aircraft or its parts may appear at the lifting surface stall (wings, tail unit) or poorly streamlined parts (landing gear, deflected controls and members of the wing high-lift devices, opened hatch shutters and so on (Fig. 11.6).

In stall zone the pressure fluctuations occur, which in most cases are of casual character and have wide frequency spectrum.

Nonstationary pressures, while acting on the aircraft elastic structure, excite skin vibration, fuel tank walls and other members. They cause oscillations of lifting surfaces and controls, and in some cases the oscillation of all aircraft.

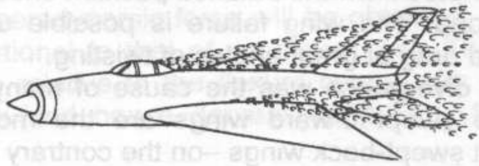

Fig. 11.6. Buffeting

Heavy buffeting excludes the possibility of piloting as the crew completely loses ability to work during very intensive vibration. In our time buffeting often occurs at transonic speeds of flight.

Divergence

Divergence is the phenomenon of unstable deformation of an airplane as the whole or some of its parts (for example, wing, control surfaces, tail unit and so on) in the airflow at some certain speed without oscillations. While reaching certain speed, the wing is deformed (twisted), during slowing down speed the wing may return to initial position.

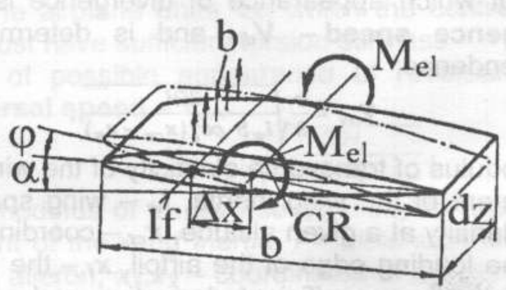

Fig. 11.7. Originating a divergence

Such deformation results in increasing the lift force and the angle of attack until the elastic moment of the wing structure balances the moment from aerodynamic forces (Fig. 11.7).

But under some conditions the balance of wings is upset. It periodically deviates from the balance position under the action of aerodynamic load. The wing failure is possible under the joint action of lift and drag at great angles of twisting.

The wing divergence was the cause of many crashes and accidents. The swept-forward wings are the most inclined to divergence, but swept-back wings –on the contrary (Fig. 11.8).

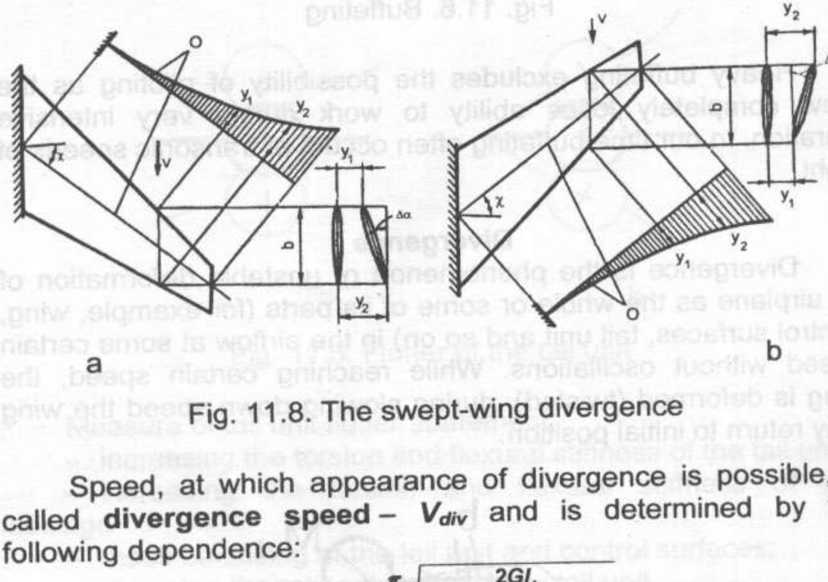

Fig. 11.8. The swept-wing divergence

Speed, at which appearance of divergence is possible, is called **divergence speed** – V_{div} and is determined by the following dependence:

$$V_{DIV} = \frac{\pi}{2}\sqrt{\frac{2GI_t}{l_W S\ \rho c_L^{\alpha}(x_{CR} - x_F)}},$$

where G – modulus of transverse elasticity of the wing material, I_t – flexure moment of the wing inertia, l_w – wing span, S – wing area, ρ – air density at a given altitude, x_{cr} – coordinate of flexure center from the leading edge of the airfoil, x_f – the coordinate of the focus point, c^{α}_{L} – coefficient derivative c_L by the angle of attack α. The derivative c^{α}_{L} increases at increasing the wing aspect ratio λ and decreases at increasing the sweep angle χ. Thus, V_{div} increases with growth of χ and reduction of λ.

Reversal of control surfaces

This kind of aeroelasticity is caused by flexural non-stiffness of the units, on which they are arranged (wings, stabilizers, fins). For example, let the aileron deflect down on the unstiff wing (to increase lift on this outer wing). Due to this deflection ΔY the increment of aerodynamic force will be obtained. This increment will be proportional to that of coefficient Δc_L. The force ΔY will twist the wing relative to the flexure center with decreasing the angle of attack (and, hence, decreasing lift (Fig. 11.9).

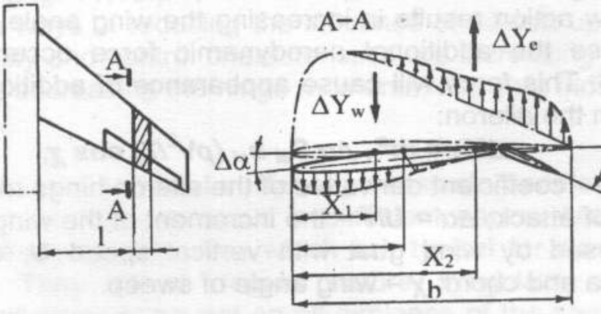

Fig. 11.9. Originating aileron reversal

And this decreasing of the force may considerably overlap the effect of aileron action. Thus, the aileron was deflected to increase lift, but the reverse effect was obtained – lift decreased. Therefore, the airplane units, on which the control surfaces are arranged, must have sufficient torsion stiffness.

Speed of possible appearance of reversal is called the **critical reversal speed** – V_{rev}.

$$V_{REV} = \frac{1}{b}\sqrt{\frac{2GI_t}{L\,\rho c_L^{\alpha}(x_2 - x_1)}},$$

where G – modulus of transverse elasticity of wing material, I_t – polar moment of the wing inertia, l – distance from the fuselage board to the aileron, x_1, x_2 – coordinates of the points of applying additional aerodynamic forces to a section, which are caused by the angle-of-attack change and the aileron deflection accordingly, b – wing chord in the aileron arrangement area, c^{α}_L – coefficient derivative c_L by the angle of attack α, p – air density at a given altitude.

There are many other dangerous phenomena of aeromechanics connected with resonance, vibrations and heating structures. In particular, there are transonic oscillations of control surfaces, aileron up-floating.

Ailerons up-floating

This phenomenon may occur when an airplane gets into the airflow with great vertical component of speed.

Airflow action results in increasing the wing angle of attack. In this case the additional aerodynamic force occurs on the aileron too. This force will cause appearance of additional hinge moment on the aileron:

$$\Delta M_S = m^{\alpha}_{S}\, \Delta\alpha\, S_{el}\, b_{el}\, (\rho V^2/2) \cos \chi,$$

where m^{α}_{S} – coefficient derivative of the aileron hinge moment by the angle of attack; $\Delta\alpha = U/v$ – the increment of the wing angle of attack caused by wind gust with vertical speed U; S_{el}, b_{el} – aileron area and chord; χ – wing angle of sweep.

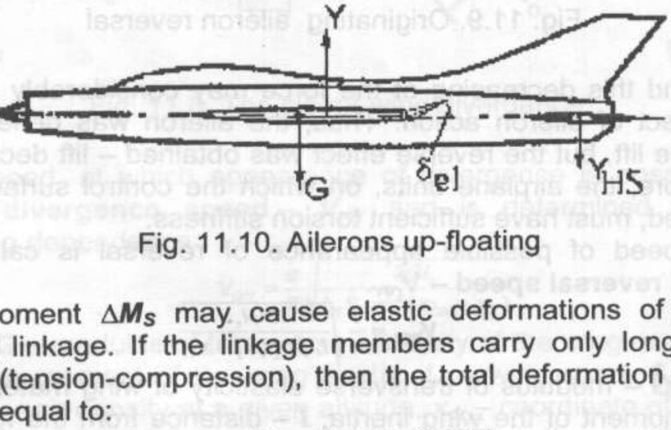

Fig. 11.10. Ailerons up-floating

Moment ΔM_S may cause elastic deformations of aileron control linkage. If the linkage members carry only longitudinal stress (tension-compression), then the total deformation of rods will be equal to:

$$\Delta L = k_S \Delta M_S\, (L/EF),$$

where k_S – gear ratio of the aileron control linkage, l – the length of aileron control linkage, F – cross sectional area of linkage rod, E – modulus of elasticity of rod material.

As a result of deformation (contraction or lengthening) and choosing play Δl of the linkage the ailerons deflect upwards to the angle:

$$\delta_{el} = 57.3\, k_S (\Delta L+\Delta l).$$

The aileron angle may reach ***3...4°***. Simultaneous aileron deflection upwards causes the appearance of positive pitching moment. This, in some cases, may cause the airplane to reach inadmissible high angles of attack. At such angles the airplane becomes unstable and uncontrollable. This may result in getting into spin (Fig. 11.10.).

The ways of reducing the influence of aileron up-floating on the stability and control characteristics are increasing the linkage stiffness, decreasing the hinge moments, applying indirect control systems.

Ailerons (control surfaces) transonic oscillations

Such oscillations occur in sufficient narrow Mach number range, at certain altitudes, which are typical for each concrete airplane. They are of irregular nature. Irregularity means that such oscillations occur not on all airplanes of the same type and not in all flights (Fig. 11.11).

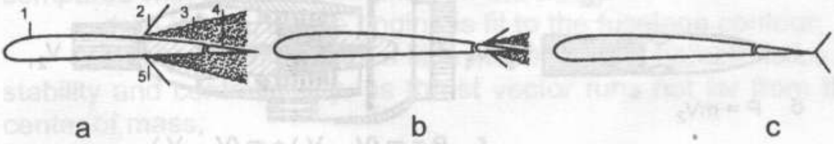

Fig. 11.11. Aileron transonic oscillations

The main reason is unstable position of shock waves in the nose portion of the control surface and the presence of plays in the control system linkage.

The way of eliminating such oscillations is applying indirect control systems. As the least measure is installing special dampers of dry friction.

Chapter 12. ARRANGEMENT OF ENGINES ON AIRPLANE

Types of engines

The following types of propulsive devices and engines can be installed on airplanes (Fig. 12.1, ref. Fig. 1.14):

– piston engines with propellers. They are installed on airplanes, developing speed of up to ***400*** km/hr;

– turboprop, turbofan and turbopropfan engines. These engines are used on airplanes developing speeds from ***400*** up to ***800*** km/hr;

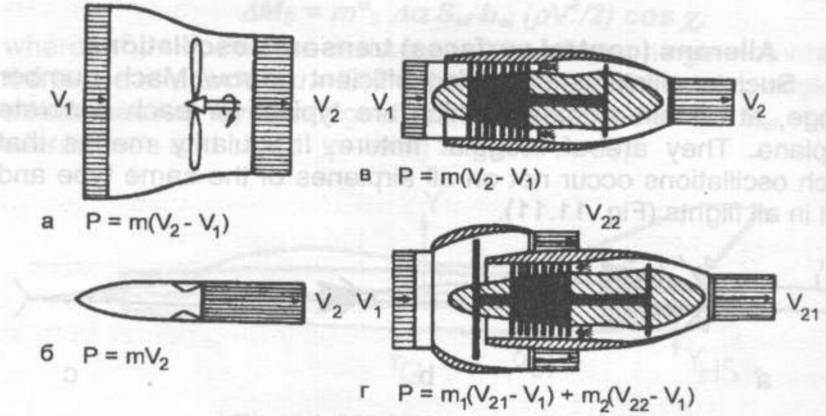

Fig. 12.1. Types of propulsive devices and engines

– turbojet engines without afterburner, turbojet engines with afterburner, bypath turbojet engines having different bypass ratio (without power augmentation and with power augmentation). These engines are installed on passenger and transport airplanes developing high subsonic speeds (more than ***800*** km/hr), as well as on maneuverable supersonic airplanes;

– ramjet engines, liquid-propellant rocket engines. These engines are used on airplanes developing speeds of more than ***3,000*** km/hr.

Number of engines

One engine is installed on non-commercial airplanes. Commercial transportation of passengers on single-engined airplanes is prohibited by ICAO regulations.

Two engines are installed on airplanes having a short take-off and landing distance, on short-range and medium-range airliners.

Three engines are installed on medium-range and long-range airliners.

Four engines are installed on long-range and intercontinental airliners.

Arrangement of engines

Engines can be mounted in the fuselage, on the fuselage, under the fuselage, inside the wing, on the wing (under the wing and above the wing).

Each kind of the power plant arrangement and mounting engines has its advantages and disadvantages. Let us consider the main ones.

Mounting engines in the fuselage.

Such arrangement has the following main advantages (as compared with mounting engines on the wing):

- drag is less, as the engine is fit to the fuselage contour;
- change of thrust has a little influence on characteristics of stability and controllability, as thrust vector runs not far from the center of mass;
- wing is aerodynamically clean.

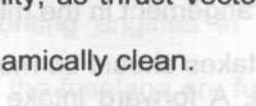

Fig. 12.2. Engine arrangement in the fuselage nose

Mounting engines in the nose part of the fuselage (Fig. 12.2). Such arrangement has the following advantages (as compared with mounting engines in other areas of the fuselage):

- good access for servicing;
- free inner fuselage volumes in the middle and tail parts;

– propeller (for piston engine) or air intake (for turbojet engine) are in undisturbed flow;]

– if a turbojet engine is used, losses in air intake ducts will be small.

Disadvantages of this arrangement are as follows:

– problems in retracting the nose landing gear strut;

– problems when arranging radar in the nose part of fuselage;

– bad forward lower view for a pilot;

– poor maneuverability characteristics, as the engine (concentrated mass) is far from the airplane center of mass, and this increases its inertia characteristics;

– bad conditions of landing with a retracted landing gear;

– in case of using a turbojet engine, losses at the outlet will be great as the outlet duct is very long.

Mounting engines in the middle part of the fuselage (Fig. 12.3).

The main advantage of such arrangement is good inertia and, consequently, good maneuverability characteristics. That is why such layout is rational for maneuverable airplanes.

Fig. 12.3. Engine arrangement in the middle part of a fuselage

In this case air intakes should be mounted on fuselage sides or under the fuselage. A forward intake in the nose part of the fuselage would be not suitable. Firstly, the duct length would be great in this case, and this would result in greater losses in it. Secondly, a considerable space of the fuselage is occupied with air intake ducts, which makes the airplane layout more complicated. Thirdly, mounting radar in the nose part of the fuselage becomes more difficult.

Mounting engines in the tail part of the fuselage.

Such engines arrangement is the most common one for maneuverable airplanes. The main advantage of it is that losses at the engine outlet are small in this case.

Besides, on modern airplanes such arrangement makes it possible to change direction of thrust vector without great losses of mass for protecting the structure from burning hot gases.

Fig. 12.4. Arrangement of engine into the tail part of a fuselage

If we have the above mentioned arrangement of engines, mounting air intakes on fuselage sides is also rational (Fig. 12.5, a) as compared with forward air intakes (Fig. 12.5, b, c).

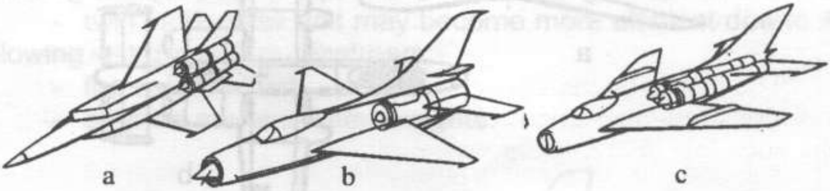

Fig. 12.5. Arrangement of engines and air intakes

Mounting engines on the fuselage (Fig. 12.6).

The main advantage of mounting engines on the fuselage (as compared with mounting engines in the fuselage) are as follows:

- inner volumes of the fuselage are fully free for placing the payload;
- losses both at the inlet of the engine and at the outlet of it are small;
- noise inside the fuselage decreases;
- access to the engine for servicing is convenient;
- level of fire safety becomes higher.

The main disadvantages of mounting engines on the fuselage (as compared with mounting engines in the fuselage) are as follows:

- drag becomes greater. Engines are outside the contours of the fuselage section increasing the airplane mid-section.

Besides, interference drag increases (because systems engine nacelle – pylon, pylon – fuselage, engine nacelle – fuselage appear additional);

– in case of using systems of changing thrust vector direction, an additional protection of structure from burning hot gases becomes necessary;

– thrust influences characteristics of the airplane stability and controllability (if not all engines are used), as thrust vector is far from the center of mass. These characteristics especially deteriorate when one of the engines fails;

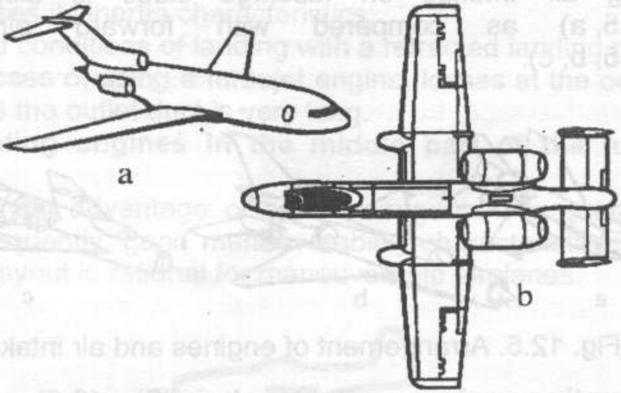

Fig. 12.6. Arrangement of engines on a tail of a fuselage

– fuselage mass increases (for about from ***10*** to ***15 %***). Firstly, in this case the fuselage structure takes up the engines thrust at a certain distance, which causes emergence of moments. Secondly, mass of engines loads the fuselage with bending moments;

– center-of-gravity positions of the empty and the loaded plane differ greatly, as the engines are far from the center of mass.

Advantages of such arrangement as compared with mounting engines in the wing are:

– wing is aerodynamically clean;

– all the wing span can be used for housing take-off and landing high-lift devices.

Disadvantages of such arrangement as compared with mounting engines on/in the wing are:

- wing mass increases (for about from ***10*** to ***15 %***). This is due to the absence of unloading effect of engines on the wing.

Arrangement of engines on (in) the wing.

The main advantages of such arrangement (as compared with arrangement of engines in the fuselage) are as follows:

- engine has an unloading effect on the wing. That is why the wing mass decreases;
- losses at the inlet and the outlet of the engine are less, because the length of ducts at the inlet and the outlet is minimal (as compared with the case, when engines are mounted in the fuselage);
- high-lift devices can become more effective due to flaps blowing with propellers slipstream or exhaust gases;
- twin vertical tail unit may become more efficient due to its blowing with propellers slipstream;
- fire safety is high;
- engines are anti-flutter weights.

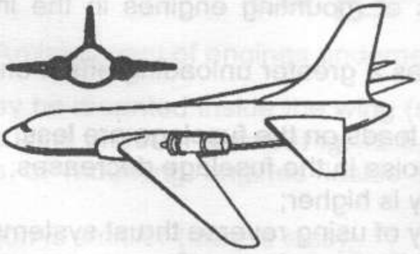

Fig. 12.7. Arrangement of engines in the wing root

The main disadvantages are as follows:

- great turning moment, if one engine fail;
- wing is not aerodynamically clean;
- increase of the airplane mid-section (as compared with the case, when engines are mounted in the fuselage);
- drag increases (as compared with the case, when engines are mounted in the fuselage) due to emergence of interference of systems “engine nacelle – wing”, “engine nacelle – pylon”, “pylon – wing”;

- possibility of foreign matters ingestion into the engine during take-off and landing (for a low-wing monoplane);
- additional vibration loads on wing from the engine;
- possibility of engines disintegration on emergency landing (for a low-wing monoplane).
- landing gear is high (for low-wing monoplane).

Engines on the wing can be mounted in the root portion (Fig. 12.7) and in the inner wing (Fig. 12.8).

Advantages of mounting engines in the root portion of the wing are as follows:

- the turning moment is less if one engine fails.

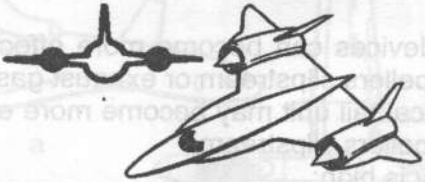

Fig. 12.8. Arrangement of engines in mid-span part of a wing

Advantages of mounting engines in the inner wing are as follows:

- engine has a greater unloading effect on the wing (due to a greater arm);
- vibration loads on the fuselage are less;
- level of noise in the fuselage decreases;
- fire safety is higher;
- possibility of using reverse thrust systems;
- there exists less danger for crew or passengers in the event of breaking off the engine blades.

Engines can be mounted over the wing (Fig. 12.9) and under the wing (Fig. 12.10).

Advantages of mounting engines above the wing are as follows:

- Coanda's effect can be used;
- there exists good protection from foreign matters ingestion on take-off and landing;
- the landing gear is not high;

- engines may be saved on emergency landing with retracted landing gear.

Fig. 12.9. Arrangement of engines above the wing

Advantages of mounting engines under the wing are as follows:

- engines are convenient for servicing.

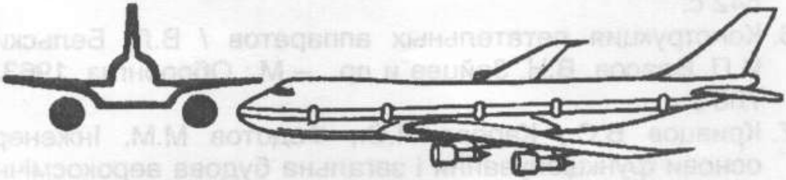

Fig. 12.10. Arrangement of engines underneath the wing

Engines may be mounted inside the wing (see Fig. 12.7 and Fig. 12.8).On the wing under or above (Fig. 12.9, 12.10).

Advantages of mounting engines inside the wing are as follows:

- mid-section is smaller (drag is less);
- interference drag is also less.

Advantages of mounting engines on/under the wing:

- servicing becomes more convenient;
- power layout of the wing is simplified.

In general case a successful choice of the place for mounting engines (taking into account the general layout of the airplane) is dictates according to performance and operating characteristics of the airplane.

List

1. Глаголев А.Н., Гольдинов М.Я., Григоренко С.М. Конструкция самолетов. – М.: Машиностроение, 1975. – 480 с.
2. Гребеньков О.А. Конструкция самолетов. – М.: Машиностроение, 1984. – 240 с.
3. Егер С.М., Матвеенко А.М., Шаталов И.А. Основы авиационной техники. – М.: МАИ, 1999. – 576 с.
4. Житомирский Г.И. Конструкция самолетов. – М.: Машиностроение, 1995. – 416 с.
5. Конструкция и прочность самолетов /В.Н. Зайцев, Г.Н. Ночевкин, В.Л. Рудаков и др. – К.: Вища шк., 1974. – 542 с.
6. Конструкция летательных аппаратов / В.Л. Бельский, И.П. Власов, В.Н. Зайцев и др. – М.: Оборонгиз, 1963. – 708 с.
7. Кривцов В.С., Карпов Я.С., Федотов М.М. Інженерні основи функціонування і загальна будова аерокосмічної техніки. – Х.: Нац. аерокосм. ун-т ″Харк. авіац. ін-т″, 2002.– Ч. 1. – 468 с; Ч. 2. – 723 с.
8. Кривцов В.С., Карпов Я.С., Федотов М.Н. Основы аэрокосмической техники. – Х.: Нац. аэрокосм. ун-т ″Харьк. авиац. ин-т″, 2003. – Ч. 1. – 620 с; Ч. 2. – 901 с.
9. Методические указания к лабораторным работам по курсу ″Общее устройство самолетов и агрегатов″/ Сост. Л.А. Малашенко. – Х.: ХАИ, 1986. – 77 с.
10. Никитин Г.А., Баканов Э.А. Основы авиации: Учебник для вузов гражданской авиации. – 2-е изд., перераб. и доп. – М.: Транспорт, 1984. – 261 с.
11. Основы общего проектирования самолетов с газотурбинными двигателями / П.В. Балабуев, С.А. Бычков, А.Г. Гребеников и др. – Учеб. пособие. – Х.: Нац. аэрокосм. ун-т ″Харьк. авиац. ин-т″, 2003.– Ч.1. – 454 с; Ч. 2. – 390 с.
12. Проектирование самолетов/ С.М. Егер, В.Ф. Мишин, Н.К. Лисейцев и др.– М.: Машиностроение, 1983. – 616 с.

13. Торенбик Э. Проектирование дозвуковых самолетов. – М.: Машиностроение, 1983. – 648 с.
14. Шульженко М.Н. Конструкция самолетов. – М.: Машиностроение, 1971. – 412 с.
15. Luftfart Lexicon. – Berlin: Transpress, 1979. – 634 с.

CONTENTS

Федотов Михаил Николаевич

ОБЩЕЕ УСТРОЙСТВО САМОЛЕТОВ

Редактор Н.С. Малашенко

Св. план, 2005
Подписано в печать 30.11.2005
Формат 60x84 1/16. Бум. офс. №2. Офс. печ.
Усл. печ. л. 13,6. Уч.-изд. л. 15,31. Т. 100 экз.
Заказ 536. Цена свободная

Национальный аэрокосмический университет
им. Н.Е. Жуковского
“Харьковский авиационный институт”
61070, Харьков-70, ул. Чкалова, 17
http://www.khai.edu
Издательский центр “ХАИ”
61070, Харьков-70, ул. Чкалова, 17
izdat@khai.edu